MVRTR 2

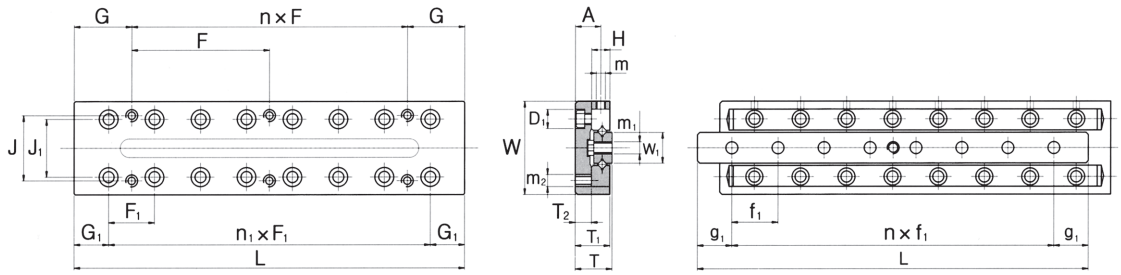

(Unit : mm)

Dimension of the side						Size of base section Location of fixing hole					Basic load capacity		Static-permissible moment			Precision μm	
T_1	T_2	H	W_1	A	m	m_1	f_1	n X f_1	g_1	The number of rollers Z	C kN	C_0 kN	MP_0 N·m	MR_0 N·m	$M\Upsilon_0$ N·m	⊿D	⊿D
11.5	5.5	6	12	8.5	M2	M3 x 0.5	20	1 x 20	7.5	5	0.51	0.51	2.29	1.37	2.21	2	4
							15	2 x 15	10	7	0.69	0.76	3.76	2.65	3.32		
								3 x 15		9	0.85	0.98	5.62	4.22	4.25		5
								4 x 15		12	0.98	1.27	9.10	7.26	5.52		
								5 x 15		14	1.18	1.57	11.8	9.71	6.80		
								6 x 15		17	1.47	2.06	16.7	14.1	8.93		
								7 x 15		19	1.57	2.25	20.4	17.5	9.77		

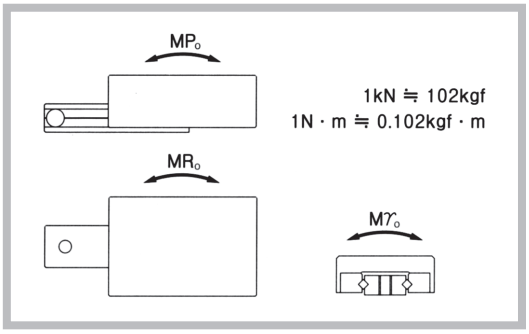

MVRT - type Miniature version (Base-tap type)

• Examples of model number formation

MVRTR | 3 | 205

- 205: Overall length of a table
- 3: Model number
- MVRTR: MVRT Standard type / MVRTR Raydent type

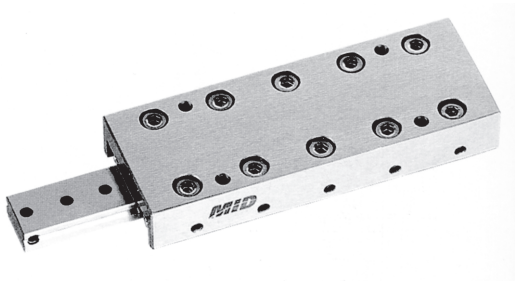

Model number	Major dimension					Dimension of a table side										(Next Page ☛)
	Max. stroke	Width W ±0.1	Height T ±0.1	Length L	Quantity g	Location of a tap attached to the table					F_1	n_1 X F_1	J_1	D_1	G_1
						J	F	n X F	G	m_2					
MVRT 3055	30	40	16	55	229	30	40	1 x 40	7.5	M4 x 0.7	25	1 x 25	28.4	7.5	15
MVRT 3080	45			80	336		65	1 x 65				2 x 25			
MVRT 3105	60			105	442		50	1 x 50	27.5			3 x 25			
MVRT 3130	75			130	551		75	1 x 75				4 x 25			
MVRT 3155	90			155	657		50	2 x 50				5 x 25			
MVRT 3180	105			180	766		75	1 x 75	52.5			6 x 25			
MVRT 3205	130			205	871		75	2 x 75	27.5			7 x 25			

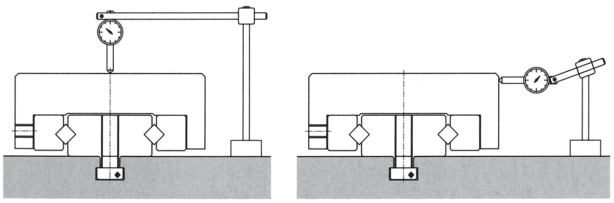

Precision : ⊿C　　Precision : ⊿D

Lower-part fastening method

MVRTR 3

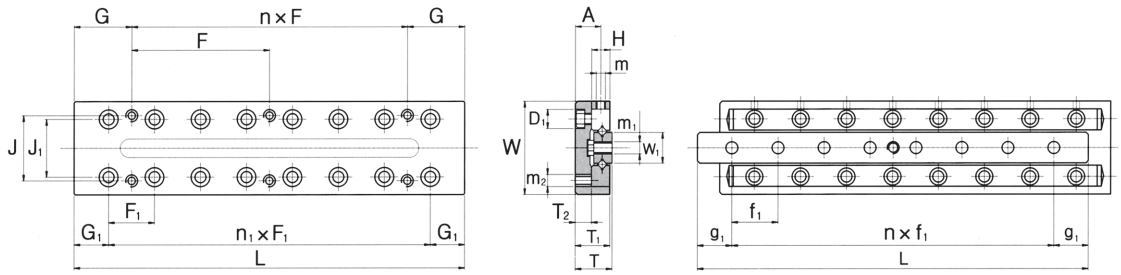

(Unit : mm)

Dimension of the side						Size of base section Location of fixing hole					Basic load capacity		Static-permissible moment			Precision μm	
T_1	T_2	H	W_1	A	m	m_1	f_1	n X f_1	g_1	The number of rollers Z	C kN	C_0 kN	MP_0 N·m	MR_0 N·m	$M\Upsilon_0$ N·m	⊿D	⊿D
15.5	7.5	8	16	11.5	M2	M4 x 0.7	35	1 x 35	10	6	1.27	1.37	9.85	6.57	7.97	2	5
							25	2 x 25	15	10	2.16	2.84	2.22	17.0	16.5		
								3 x 25		13	2.94	4.22	34.8	28.1	24.4	3	6
								4 x 25		17	3.63	5.69	55.8	47.1	33.3		
								5 x 25		20	3.92	6.37	74.7	64.6	36.9		
								6 x 25		24	4.02	6.57	104	92.3	38.1		
								7 x 25		26	4.22	7.16	120	107	41.5		

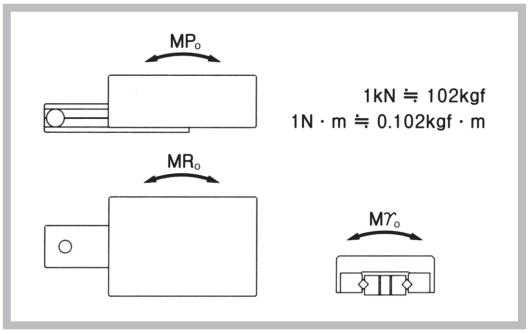

MVRT - A type Miniature version (Base-fixing type)

• Examples of model number formation

MVRTR | 1 | 085 | A

- A: Base fixing hole type
- 085: Overall length of a table
- 1: Model number
- MVRTR: MVRT Standard type / MVRTR Raydent type

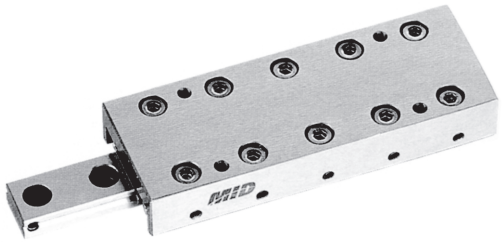

Model number	Major dimension					Dimension of a table side										(Next Page ☛)
	Max. stroke	Width W ±0.1	Height T ±0.1	Length L	Quantity g	Location of a tap attached to the table					F_1	n_1 X F_1	J_1	D_1	G_1
						J	F	n X F	G	m_2					
MVRT 1025 A	12			25	23		18	1 x 18	3.5			1 x 10			
MVRT 1035 A	18			35	32		28	1 x 28	3.5			2 x 10			
MVRT 1045 A	25			45	42		20	1 x 20	12.5			3 x 10			
MVRT 1055 A	32	28	8	55	52	14	30	1 x 30	12.5	M2.6 x 0.45	10	4 x 10	12.4	4.1	7.5
MVRT 1065 A	40			65	62		20	2 x 20	12.5			5 x 10			
MVRT 1075 A	45			75	72		30	1 x 30	22.5			6 x 10			
MVRT 1085 A	50			85	82		30	2 x 30	12.5			7 x 10			

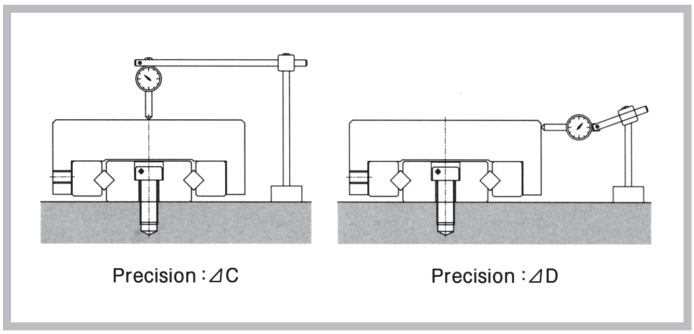

Lower-part fastening method

MVRTR 1 A

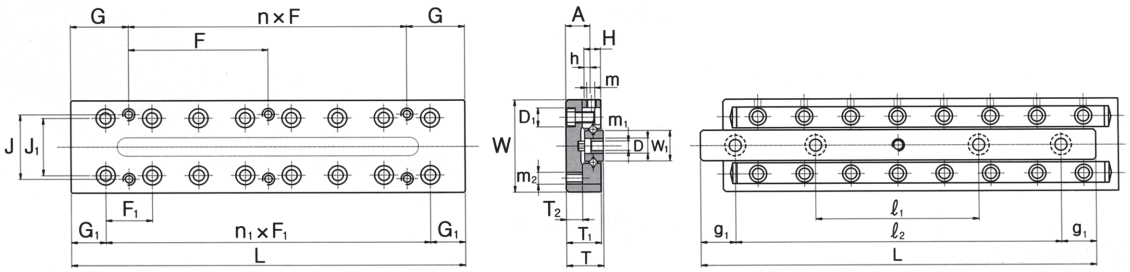

(Unit : mm)

Dimension of the side						Size of base section Location of fixing hole					Basic load capacity		Static-permissible moment			Precision μm	
T_1	T_2	H	W_1	A	m	m_1 x D x h	ℓ_1	ℓ_2	g_1	The number of rollers Z	C kN	C_0 kN	MP_0 N·m	MR_0 N·m	$M\Upsilon_0$ N·m	⊿C	⊿D
15.5	7.5	8	16	11.5	M2	2.5 x 4.1 x 2.2	-	18	3.5	5	0.28	0.27	0.75	0.46	0.69	2	4
							-	25	5	7	0.38	0.41	1.23	0.85	1.03		
							25	38	3.5	10	0.56	0.69	2.18	1.67	1.72		5
							29	48	3.5	12	0.65	0.82	2.97	2.35	2.06		
							31	55	5	14	0.73	0.96	3.87	3.17	2.4		
							35	65	5	18	0.87	1.27	6.05	5.16	3.19		
							40	75	5	20	0.94	1.27	7.32	6.37	3.43		

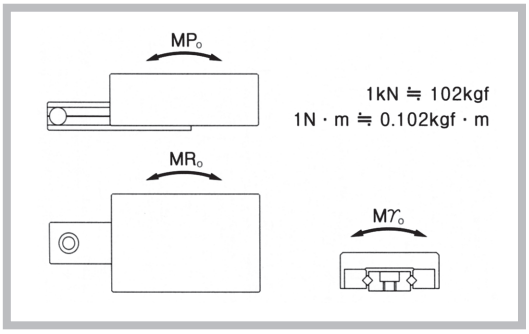

MVRT - A type Miniature version (Base-fixing type)

• Examples of model number formation

MVRTR | 2 | 125 | A

- A: Base fixing hole type
- 125: Overall length of a table
- 2: Model number
- MVRTR: MVRT Standard type / MVRTR Raydent type

Model number	Major dimension					Dimension of a table side										(Next Page ☛)
	Max. stroke	Width W ±0.1	Height T ±0.1	Length L	Quantity g	Location of a tap attached to the table					F_1	n_1 X F_1	J_1	D_1	G_1
						J	F	n X F	G	m_2					
MVRT 2035 A	18			35	78		28	1 x 28	3.5			1 x 15			
MVRT 2050A	30			50	113		43	1 x 43	3.5			2 x 15			
MVRT 2065 A	40			65	147		30	1 x 30	17.5			3 x 15			
MVRT 2080 A	50	30	8	80	181	22	45	1 x 45	17.5	M3 x 0.5	15	4 x 15	20	6	10
MVRT 2095 A	60			95	217		30	2 x 30	17.5			5 x 15			
MVRT 2110 A	70			110	254		45	1 x 45	32.5			6 x 15			
MVRT 2125 A	80			125	287		45	2 x 45	17.5			7 x 15			

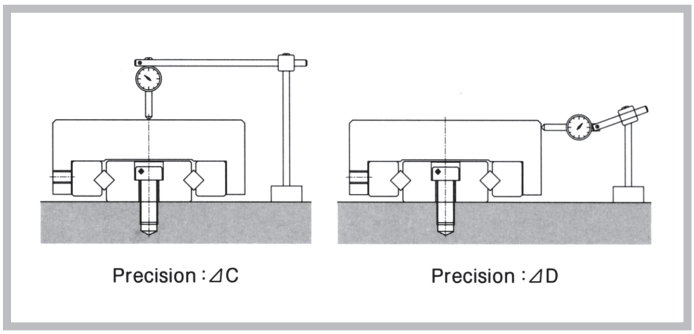

Lower-part fastening method

MVRTR 2 A

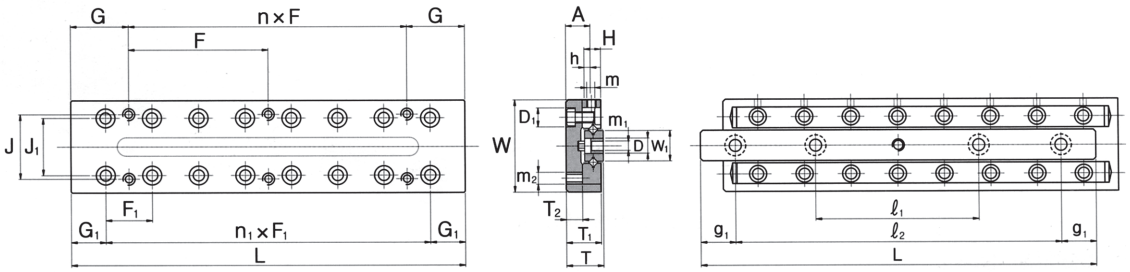

(Unit : mm)

Dimension of the side						Size of base section Location of fixing hole					Basic load capacity		Static-permissible moment			Precision μm	
T_1	T_2	H	W_1	A	m	m_1 x D x h	ℓ_1	ℓ_2	g_1	The number of rollers Z	C kN	C_0 kN	MP_0 N·m	MR_0 N·m	$M\Upsilon_0$ N·m	⊿C	⊿D
11.5	5.5	6	12	8.5	M2	3.5 x 6 x 3.2	-	25	5	5	0.51	0.51	2.29	1.37	2.21	2	4
							-	35	7.5	7	0.69	0.76	3.76	2.65	3.32		
							33	55	5	9	0.85	0.98	5.62	4.22	4.25		5
							40	70	5	12	0.98	1.27	9.10	7.26	5.25		
							45	85	5	14	1.11	1.57	11.8	9.71	6.80		
							50	95	7.5	17	1.47	2.06	16.7	14.1	8.93		
							55	110	7.5	19	1.57	2.25	20.4	17.5	9.77		

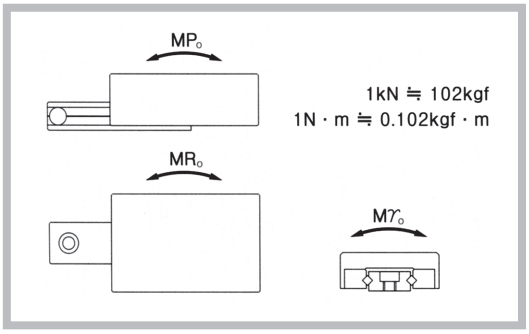

MVRT - A type Miniature version (Base-fixing type)

• Examples of model number formation

MVRTR | 3 | 205 | A

- A: Base fixing hole type
- 205: Overall length of a table
- 3: Model number
- MVRTR: MVRT Standard type / MVRTR Raydent type

Model number	Major dimension					Dimension of a table side										(Next Page ☛)
	Max. stroke	Width W ±0.1	Height T ±0.1	Length L	Quantity g	Location of a tap attached to the table					F_1	n_1 X F_1	J_1	D_1	G_1
						J	F	n X F	G	m_2					
MVRT 3055 A	30			55	226		40	1 x 40	7.5			1 x 25			
MVRT 3080 A	45			80	333		65	1 x 65	7.5			2 x 25			
MVRT 3105 A	60			105	439		50	1 x 50	27.5			3 x 25			
MVRT 3130 A	75	40	16	130	548	30	75	1 x 75	27.5	M4 x 0.7	25	4 x 25	28.4	7.5	15
MVRT 3155 A	90			155	652		50	2 x 50	27.5			5 x 25			
MVRT 3180 A	105			180	761		75	1 x 75	52.5			6 x 25			
MVRT 3205 A	130			205	886		75	2 x 75	27.5			7 x 25			

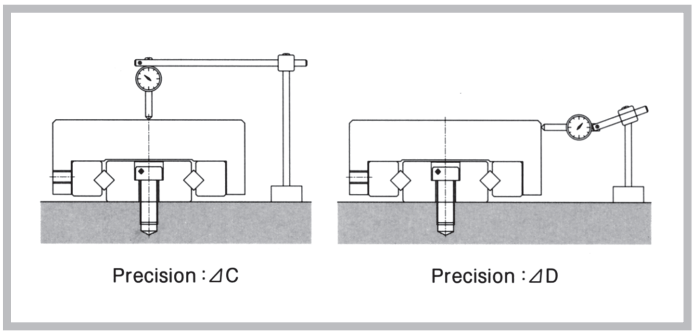

Lower-part fastening method

MVRTR 3 A

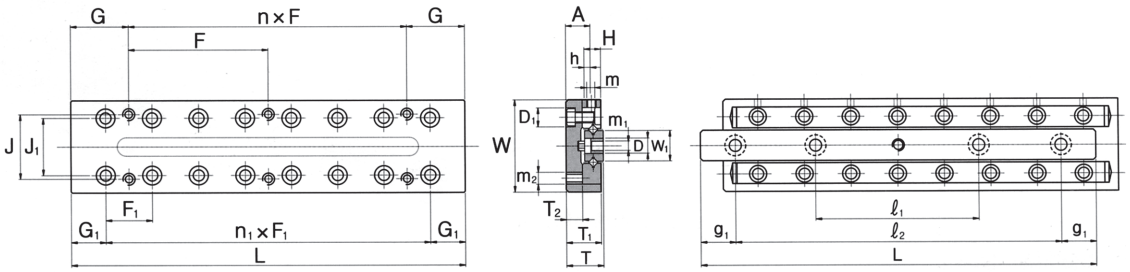

(Unit : mm)

Dimension of the side						Size of base section Location of fixing hole					Basic load capacity		Static-permissible moment			Precision μm	
T_1	T_2	H	W_1	A	m	m_1 x D x h	ℓ_1	ℓ_2	g_1	The number of rollers Z	C kN	C_0 kN	MP_0 N·m	MR_0 N·m	$M\Upsilon_0$ N·m	⊿C	⊿D
15.5	7.5	8	16	11.5	M2	4.5 x 7.5 x 4.2	-	40	7.5	6	1.27	1.37	9.85	6.57	7.97	2	5
							43	68	6	10	2.16	2.84	22.2	17.0	16.5		
							55	90		13	2.94	4.22	34.8	21.8	24.4	3	6
							65	115		17	3.63	5.69	55.8	47.1	33.3		
							95	140	7.5	20	3.92	6.37	74.7	64.6	36.9		
							85	165		24	4.02	6.57	104	92.3	38.1		
							90	190		26	4.22	7.16	120.8	107.9	41.5		

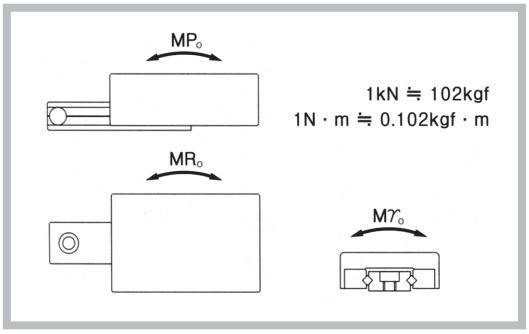

MVRU - type

• Examples of model number formation

MVRUR | 1 | 085

- MVRUR: MVRU Standard type / MVRUR Raydent type
- 1: Model number
- 085: Overall length of a table

Model number	Major dimension					Dimension of a table side (Next Page ☛)										
	Max. stroke	Width W ±0.1	Height T ±0.1	Length L	Quantity g	Location of a tap attached to the table				Location of a tap attached to the side						
						J	n x F	G	S	J_1	n_1 x F_1	G_1	G_2	b_1	T_3	S_1 x ℓ
MVRU 1025	12			25	0.08		-				1 x 10		2.5			
MVRU 1035	18			35	0.11		1 x 10				2 x 10		4.5			
MVRU 1045	25			45	0.15		2 x 10				3 x 10		6			
MVRU 1055	32	30	17	55	0.18	12.5	3 x 10	12.5	M2 x 0.4	18.4	4 x 10	7.5	7.5	12	2.5	M2 (Pitch 0.4) x 4
MVRU 1065	40			65	0.21		4 x 10				5 x 10		8.5			
MVRU 1075	45			75	0.24		5 x 10				6 x 10		11			
MVRU 1085	50			85	0.27		6 x 10				7 x 10		13.5			

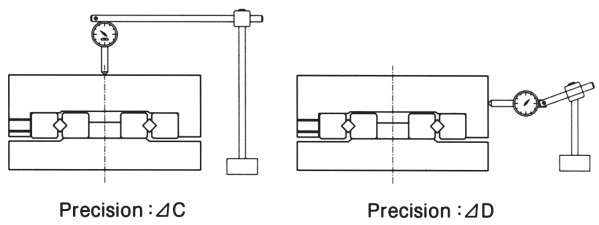

MVRUR 1

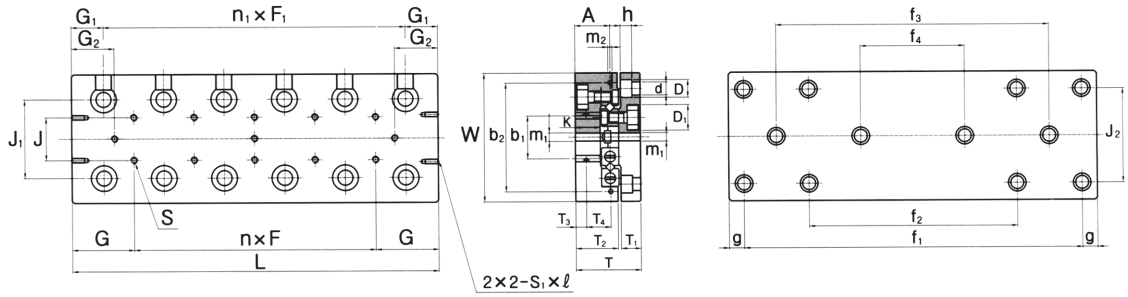

(Unit : mm)

								Size of base section Location of fixing hole							Basic load capacity		Static-permissible moment			Precision μm	
T_2	T_1	K	d x D x h	D_1	m_1	A	m_2	J_2	f_1	f_2	f_3	f_4	g	The number of rollers Z	C kN	C_0 kN	MP_0 N·m	MR_0 N·m	$M\Upsilon_0$ N·m	⊿C	⊿D
									18	-	-	-		6	0.28	0.27	0.75	0.46	1.24		
									28	-	-	-		10	0.38	0.61	1.23	0.85	1.85		4
									38	-	-	-		13	0.56	0.69	2.18	0.67	3.09		
11	5.5	6.5	2.55 x 4.1 x 2.5	4.1	M2	9	M2	22	48	28	-	-	3.5	17	0.65	0.82	2.97	2.35	3.71	2	
									58	38	-	-		20	0.73	0.96	3.87	3.17	4.33		
									68	48	-	-		24	0.87	0.27	6.05	5.16	5.74		5
									78	58	-	-		26	0.94	1.37	7.32	6.34	6.18		

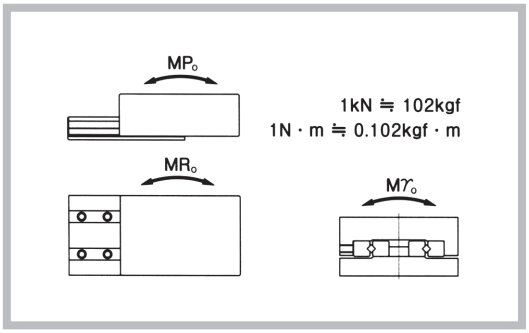

MVRU - type

• Examples of model number formation

MVRUR | 2 | 125

- 125: Overall length of a table
- 2: Model number
- MVRUR: MVRU Standard type / MVRUR Raydent type

Model number	Major dimension					Dimension of a table side (Next Page ☛)										
	Max. stroke	Width W ±0.1	Height T ±0.1	Length L	Quantity g	Location of a tap attached to the table				Location of a tap attached to the side						
						J	n x F	G	S	J_1	n_1 x F_1	G_1	G_2	b_1	T_3	S_1 x ℓ
MVRU 2035	18			35	0.2		-				1 x 15		3			
MVRU 2050	30			50	0.26		1 x 15				2 x 15		4.5			
MVRU 2065	40			65	0.34		2 x 15				3 x 15		7			
MVRU 2080	50	40	21	80	0.42	15	3 x 15	17.5	M3 x 0.5	254	4 x 15	10	9.5	16	3.4	M2 (Pitch 0.4) x 4
MVRU 2095	60			95	0.5		4 x 15				5 x 15		12			
MVRU 2110	70			110	0.58		5 x 15				6 x 15		14.5			
MVRU 2125	80			125	0.66		6 x 15				7 x 15		17			

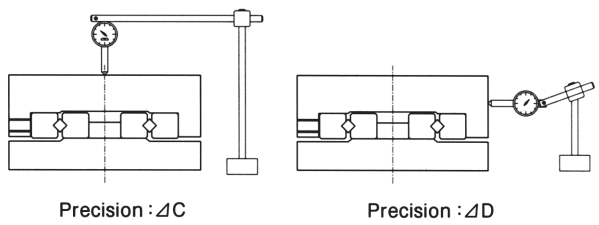

MVRUR 2

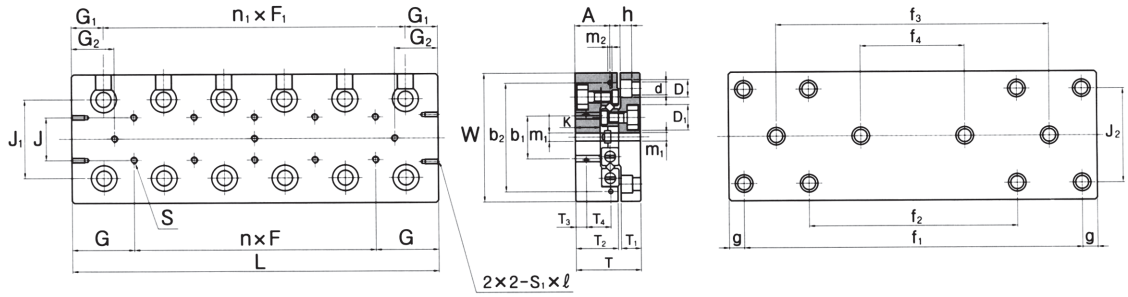

(Unit : mm)

								Size of base section Location of fixing hole							Basic load capacity		Static-permissible moment			Precision μm	
T_2	T_1	K	d x D x h	D_1	m_1	A	m_2	J_2	f_1	f_2	f_3	f_4	g	The number of rollers Z	C kN	C_0 kN	MP_0 N·m	MR_0 N·m	$M\Upsilon_0$ N·m	⊿C	⊿D
									25	-	-	-		5	0.51	0.51	2.29	1.40	3.06		
									40	-	-	-		7	0.69	0.76	3.76	2.60	4.59		4
									55	-	-	-		9	0.85	0.98	5.62	4.17	5.89	2	
14	6.5	7.5	3.5 x 6 x 3.5	6	M3	11	M3	30	70	40	-	-	5	12	1.18	1.57	9.10	7.22	9.42		5
									85	55	-	-		14	1.27	1.76	11.8	9.70	10.5		
									100	70	-	-		17	1.47	2.06	16.7	14.1	12.3	3	6
									115	85	-	-		19	1.57	2.25	20.4	17.5	13.5		

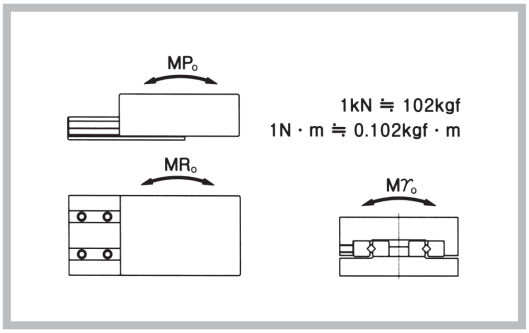

MVRU - type

• Examples of model number formation

MVRUR 3 205

- 205: Overall length of a table
- 3: Model number
- MVRUR: MVRU Standard type / MVRUR Raydent type

Model number	Major dimension					Dimension of a table side (Next Page ☛)										
	Max. stroke	Width W ±0.1	Height T ±0.1	Length L	Quantity g	Location of a tap attached to the table				Location of a tap attached to the side						
						J	n x F	G	S	J_1	n_1 x F_1	G_1	G_2	b_1	T_3	S_1 x ℓ
MVRU 3055	30	60	28	55	0.57	25	-	27.5	M4 x 0.7	39	1 x 25	39	5.5	40	5.5	M3 (Pitch 0.5) x 6
MVRU 3080	45			80	0.8		1 x 25				2 x 25		10.5			
MVRU 3105	60			105	1.03		2 x 25				3 x 25		10.5			
MVRU 3130	75			130	1.26		3 x 25				4 x 25		20.5			
MVRU 3155	90			155	1.49		4 x 25				5 x 25		25.5			
MVRU 3180	105			180	1.72		5 x 25				6 x 25		30.5			
MVRU 3205	130			205	1.95		6 x 25				7 x 25		30.5			
MVRU 4085	50	80	35	85	1.5	40	-	42.5	M5 x 0.8	53	1 x 40	22.5	10.5	55	6.5	
MVRU 4125	75			125	2.3		1 x 40				2 x 40		18			
MVRU 4165	105			165	3.1		2 x 40				3 x 40		23			
MVRU 4205	135			205	3.8		3 x 40				4 x 40		30.5			
MVRU 4245	155			245	4.6		4 x 40				5 x 40		38			
MVRU 4285	185			285	5.3		5 x 40				6 x 40		43			

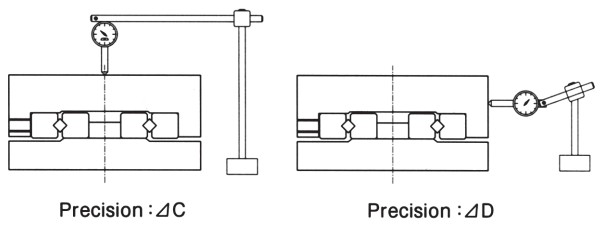

MVRUR 3

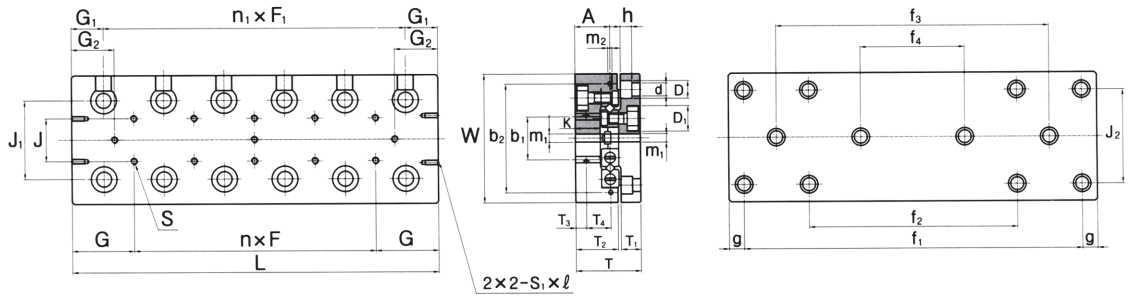

(Unit : mm)

								Size of base section Location of fixing hole							Basic load capacity		Static-permissible moment			Precision μm	
T_2	T_1	K	d x D x h	D_1	m_1	A	m_2	J_2	f_1	f_2	f_3	f_4	g	The number of rollers Z	C kN	C_0 kN	MP_0 N·m	MR_0 N·m	$M\Upsilon_0$ N·m	⊿C	⊿D
14	6.5	7.5	3.5 x 6 x 3.5	40	M4	14.5	M4	40	35	-	-	-	10	6	1.47	1.67	9.85	6.54	15.5	2	4
									60	-	-	-		10	2.06	2.75	22.2	17.0	25.6		
									85	-	-	-		13	2.35	3.33	34.8	28.1	31.1		5
									110	-	-	-		17	2.94	4.41	55.8	47.1	41.2		
									135	-	85	-		20	3.53	5.49	74.7	64.6	51.2		
									160	-	110	-		24	4.02	6.57	104	92.3	61.2	3	6
									185	85	135	-		26	4.22	7.16	120	107	66.8		
				60		18.5		60	65	-	-	-	10	7	3.53	4.80	48.7	33.7	64.0		
									80	-	-	-		11	5.20	8.04	101	79.1	107		
									120	-	-	-		14	6.77	11.3	153	125	150		
									160	80	-	-	22.5	18	8.14	14.5	239	204	193		
									200	120	-	-		22	9.42	17.7	344	302	235		
									240	160	-	-		26	10.7	20.9	468	418	278		

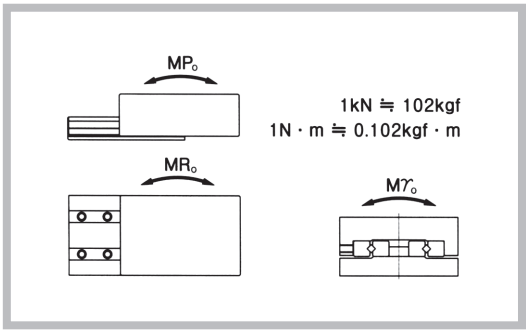

MVRT - type Miniature version (Base-tap type)

• Examples of model number formation

MVRTR | 1 | 085

- MVRTR: MVRT Standard type / MVRTR Raydent type
- 1: Model number
- 085: Overall length of a table

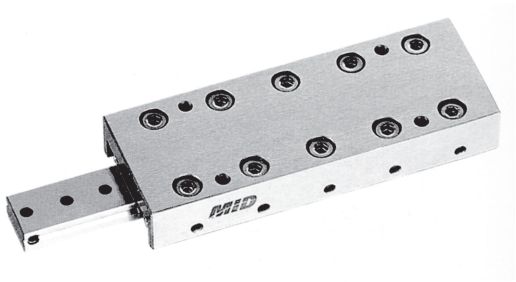

Model number	Major dimension					Dimension of a table side										(Next Page ☛)
	Max. stroke	Width W ±0.1	Height T ±0.1	Length L	Quantity g	Location of a tap attached to the table					F_1	n_1 X F_1	J_1	D_1	G_1
						J	F	n X F	G	m_2					
MVRT 1025	12			25	23		18	1 x 18	3.5			1 x 10			
MVRT 1035	18			35	32		28	1 x 28	3.5			2 x 10			
MVRT 1045	25			45	42		20	1 x 20	12.5			3 x 10			
MVRT 1055	32	20	8	55	52	14	30	1 x 30	12.5	M2.6 x 0.45	10	4 x 10	12.4	4.1	7.5
MVRT 1065	40			65	62		20	2 x 20	12.5			5 x 10			
MVRT 1075	45			75	72		30	1 x 30	22.5			6 x 10			
MVRT 1085	50			85	82		30	2 x 30	12.5			7 x 10			

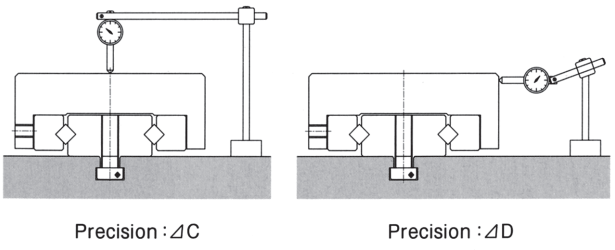

Lower-part fastening method

MVRTR 1

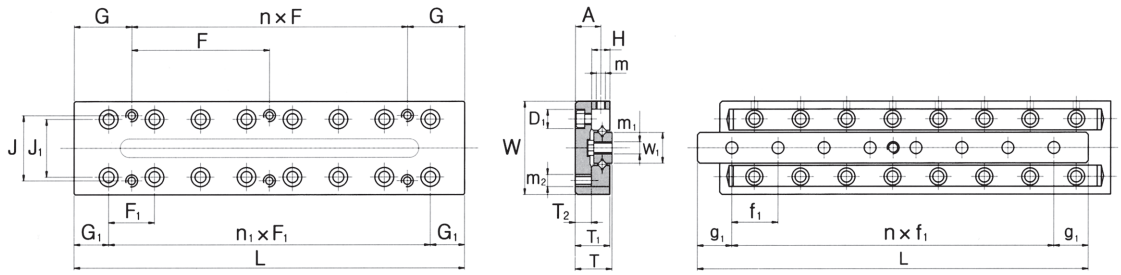

(Unit : mm)

Dimension of the side						Size of base section Location of fixing hole					Basic load capacity		Static-permissible moment			Precision μm	
T_1	T_2	H	W_1	A	m	m_1	f_1	n X f_1	g_1	The number of rollers Z	C kN	C_0 kN	MP_0 N·m	MR_0 N·m	$M\Upsilon_0$ N·m	⊿D	⊿D
7.5	3.5	4	6.6	5.5	M2	M2.6 x 0.45	7.5	2 x 7.5	5	5	0.28	0.27	0.75	0.46	0.69	2	4
								2 x 10		7	0.38	0.41	1.23	0.85	1.03		
							10	3 x 10	7.5	10	0.56	0.69	2.18	1.67	1.72		5
								4 x 10		12	0.65	0.82	2.97	2.35	2.06		
								5 x 10		14	0.73	0.96	3.87	3.17	2.4		
								6 x 10		18	0.87	1.27	6.05	5.16	3.19		
								7 x 10		20	0.94	1.37	7.32	6.37	3.43		

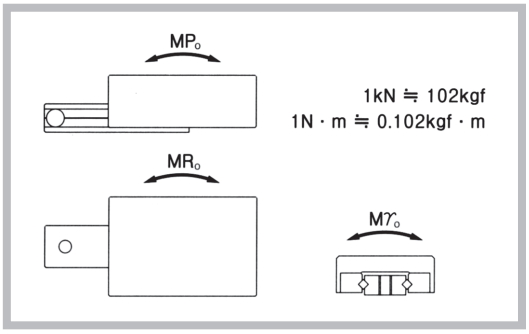

MVRT - type Miniature version (Base-tap type)

• Examples of model number formation

MVRTR | 2 | 125

- 125: Overall length of a table
- 2: Model number
- MVRTR: MVRT Standard type / MVRTR Raydent type

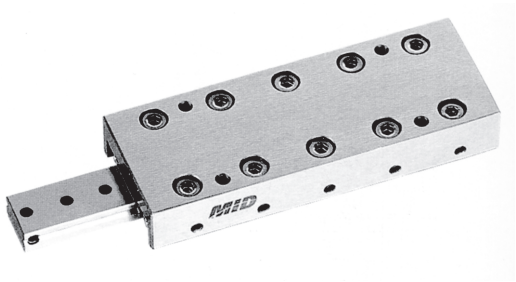

Model number	Major dimension					Dimension of a table side										(Next Page ☛)
	Max. stroke	Width W ±0.1	Height T ±0.1	Length L	Quantity g	Location of a tap attached to the table					F_1	n_1 X F_1	J_1	D_1	G_1
						J	F	n X F	G	m_2					
MVRT 2035	18			35	78		28	1 x 28	3.5			1 x 15			
MVRT 2050	30			50	113		43	1 x 43	3.5			2 x 15			
MVRT 2065	40			65	147		30	1 x 30	17.5			3 x 15			
MVRT 2080	50	30	12	80	184	22	45	1 x 45	17.5	M3 x 0.5	15	4 x 15	20	6	10
MVRT 2095	60			95	220		30	2 x 30	17.5			5 x 15			
MVRT 2110	70			110	257		45	1 x 45	32.5			6 x 15			
MVRT 2125	80			125	290		45	2 x 45	17.5			7 x 15			

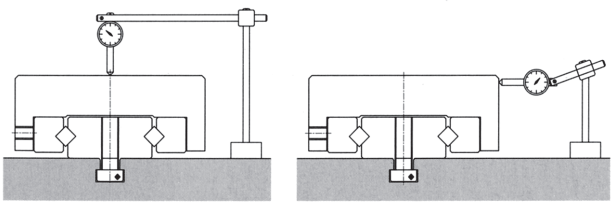

Lower-part fastening method