Single Axis Robot

KA Series

3.1 KA Specifications

Series	Driven Type	Aluminum Module Base Width	Motor Choice	Maximum Load (Kg)								Motor Connection Type	Model
				Lead (mm)									
				5	10	20	25	5	10	20	25		
				Horizontal				Vertical					
KA	Ballscrew	100	100W (3150 rpm)	61	42	21		20	12	4		Direct	KA100
				61	42	21		20	12	4		Bottom	KA100-FD
				61	42	21		20	12	4		Internal	KA100-FI
				61	42	21		20	12	4		Left	KA100-FL
				61	42	21		20	12	4		Right	KA100-FR
		136	200W (3150 rpm)	120	84	42		40	23	8		Direct	KA136
				120	84	42		40	23	8		Bottom	KA136-FD
				120	84	42		40	23	8		Internal	KA136-FI
				120	84	42		40	23	8		Left	KA136-FL
				120	84	42		40	23	8		Right	KA136-FR
		170	400W (2400 rpm)		221	110	88		61	22	16	Direct	KA170
					221	110	88		61	22	16	Bottom	KA170-FD
					221	110	88		61	22	16	Internal	KA170-FI
					221	110	88		61	22	16	Left	KA170-FL
					221	110	88		61	22	16	Right	KA170-FR
		200	750W (3150rpm)		315		126		90		23	Direct	KA200
					315		126		90		23	Bottom	KA200-FD
					315		126		90		23	Internal	KA200-FI
					315		126		90		23	Left	KA200-FL
					315		126		90		23	Right	KA200-FR
	Belt*	100	100W	10								Left	KA100B-FL
				10								Right	KA100B-FR
		136	200W	19								Left	KA136B-FL
				19								Right	KA136B-FR
		170	400W	39								Left	KA170B-FL
				39								Right	KA170B-FR

*Belt driven KA is preferred to be used in horizontal applications. Maximum linear velocity of 1800 mm/sec.

3.2 Features

1. Complete selection of modules and accessories for most applications.
   Driven Type：ballscrew, toothed belt
   AC motor output：30W～750W servo motor or step motor
   Motor connection type (depends on available space)：direct, bottom, internal, left, right
   Max stroke：100mm～3000mm
   Maximum load：max of 315kg horizontally and max of 90kg vertically.
2. Easy transformation into a multi-axis robot.

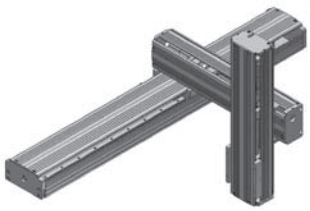
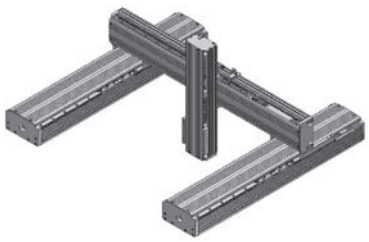

3. U-shaped aluminum base features a light weight construction and high rigidity.

The following table lists the moment of inertia for each KA aluminum base：

Series	Moment of Inertia (mm^4)	Ixx	Iyy	
KA	KA100	434933	1811708	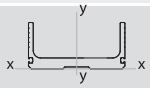
	KA136	854975	5126158	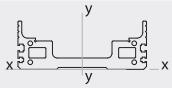
	KA170	2307669	11852669	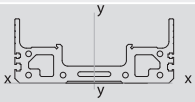
	KA200	2401525	19053275	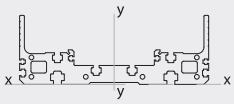
KS	KS10	213463	1454725	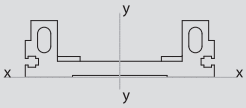
	KS14	659349	4399410	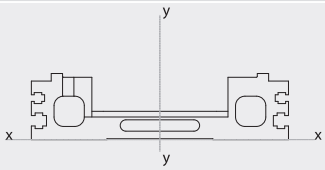
	KS18	1154782	12040879	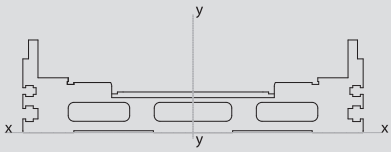
KU	KU60	1182976	548959	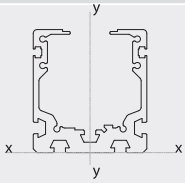
	KU80	3591984	1672481	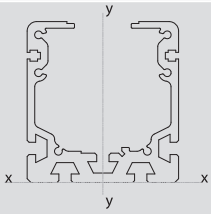

4. Easy installation and maintenance.
5. Customized designs available for different applications.

3.3 Applications

KA single axis robots can be used in a wide range of applications. The following are examples of applicable systems：Automatic soldering system, screw feeding machine, adhesive laminating machine, CCD lens shifting, automatic paint spray machine, cutting machine, semiconductor manufacturing equipment, assembly equipment, press machine, spot welding machine, surface processing automation, self adhesive labeling machine, packaging machine, marking press machine, conveying equipment, and more.

3.4 Technical Information

Please note the following technical information while selecting a proper KA model.

3.4.1 Specification

The KA series designation is represented as the following:

(1)	(2)	(3)	(4)	(5)	(6)	(7)	(8)	(9)	(10)
Model	Lead	Precision Grade	Effective Stroke	Load Type	Motor Flange	Aluminum Cover	Limit Switch	Motor	Installation

(1) Model

KA is the designation for all KA models and the number represents the width of the aluminum module base.

(2) Lead

The lead on the ballscrew, in millimeters, indicates how far a sliding table travels with a complete rotation of the ballscrew. The following table shows the current available ballscrews for the KA series：

KA Model	KA136															
	KA100						KA170								KA200	
Ballscrew diameter (Φ)	15			16			20				25		32		25	
Lead (P)	10	20	40	5	10	32	5	10	20	40	25	50	32	40	10	25
L (available in left hand thread)			*	L	L	*	L		L	*	*	*	*	*	*	*
*Please contact HIWIN for high lead screws, left-hand thread screws, or any unlisted ballscrew.																

(3) Precision Grade

The precision grade for the sliding table to repeat the same position after traveling back and forth.
C; Normal grade : ±0.02mm, P; Precision grade：±0.01mm.
The repeatability is measured by the largest error occurred at any point when the sliding table is traveling back and forth.
＊Attention：KA products do not mark the absolute position accuracy.

(4) Effective Stroke

The travel range for the KA sliding table (in millimeters).
＊Attention：Vibration might occur when the effective stroke is longer than listed in the catalog. The RPM's should be decreased to improve the situation, please refer to the "Speed" section for RPM description.

(5) Load Type

Currently, the KA series is designed to only support the listed standard load. Please contact a HIWIN sales representative for inquiries on greater dynamic load or heavy load models.

(6) Motor Flange

Direct connection is the standard type on the KA series (coupling driven). There are different flange options for adapting different types of motors, please refer to the following table.

	KA100		KA136		KA170		KA200	
	Screw	PCD	Screw	PCD	Screw	PCD	Screw	PCD
F0	M3	40	M4	60	M5	70	M6	90
	M4	46	M5	70				
F1	M3	45	M4	70	M6	90	M5	70
F2			M4	46	M6	□70	M5	90
F3			M3	45	M5	90		
F4			M5	90	M6	□69.58		
F5			M4	□50				
F6			M4	□47.14				

FD：Bottom connected motor (belt pulley drive).
FI ：Internal connected motor (coupling drive).
FL：Left connected motor (belt pulley drive).
FR：Right connected motor (belt pulley drive).
Please refer to the Appendix for different flange sizes.

(7) Aluminum Cover

All standard KA models are equipped with an aluminum protection cover. U：without aluminum cover.

(8) Limit Switch

HIWIN provides some options for limit switches in this catalog. Please contact a HIWIN sales representative for any other type not listed.

(9) Motor

No mark：motor not included. Please inform HIWIN in advance when installing a motor provided by the customer.
M：motor included. Please refer to the Appendix for motor selection, for other customized motors please contact a HIWIN sales representative.

(10) Installation

The designation "V" is indicated when the KA module is installed vertically. Please limit the load within each module's limit.

＊Attention：To prevent the load from slipping off, a brake system is recommended on the motor when the KA module is installed vertically.

＊＊Please contact a HIWIN sales representative for other special specifications.

3.4.2 Speed

(1) Maximum Linear Velocity

The KA sliding table's maximum linear velocity (V) is derived from the maximum ballscrew RPM(S) multiplied by the lead (L).

V(mm/sec) = S(rpm)÷60×L(mm)

Please verify the maximum linear velocity meets your requirement when selecting a KA model. The maximum linear velocity is ：

Lead(mm)	5	10	20	25
RPM: S(rpm)	Maximum Linear Velocity V: (mm/sec)			
200	17	33	67	83
400	33	67	133	167
600	50	100	200	250
800	67	133	267	333
1000	83	167	333	417
1200	100	200	400	500
1400	117	233	467	583
1600	133	267	533	667
1800	150	300	600	750
2000	167	333	667	833
2200	183	367	733	917
2400	200	400	800	1000
2600	217	433	867	1083
2800	233	467	933	1167
3000	250	500	1000	1250
3200	267	533	1067	1333

(2) Maximum Speed

The maximum allowable speed for the ballscrew is determined by its critical speed. When the rotational speed is over the critical speed limit, it will cause the ballscrew to bend under the stress of vibration. The critical speed is correlated closely with the total length of the ballscrew. Therefore, the critical speed also determines the effective stroke and total length of a KA model.

The critical speed of a ballscrew is calculated using the following equation：

$$Np = 0.8 \times 2.71 \times 10^8 \times \frac{M_f d_r}{L_t^2}$$

Np = maximum permissible speed (rpm)
Mf = factor for different mounting types,
KA uses fixed-supported type, Mf = 0.689
dr = root diameter of screw shaft (mm)
Lt = distance between support bearings (mm)

Derived from the above equation, the table below shows the maximum stroke and critical speed of different KA models.

KA Model	KA136								
	KA100				KA170			KA200	
Ballscrew (Φ-P)	16-5	15-10	16-10	15-20	20-20	20-10	25-25	25-10	25-25
Ballscrew (dr)	12.899	12.364	12.684	12.399	17.084	15.982	22.094	21.824	22.094
RPM	Maximum Stroke								
200	2948	2883	2922	2887	3416	3211	3818	3776	3801
400	2039	1993	2020	1996	2370	2199	2628	2593	2611
600	1636	1598	1621	1601	1906	1751	2101	2069	2084
800	1396	1363	1383	1366	1630	1483	1787	1757	1770
1000	1232	1203	1220	1205	1441	1301	1573	1544	1555
1200	1111	1085	1101	1086	1302	1166	1414	1387	1397
1400	1017	993	1007	994	1194	1062	1291	1264	1274
1600	941	918	932	920	1107	978	1192	1166	1175
1800	879	857	870	858	1035	908	1110	1084	1093
2000	826	805	817	806	974	849	1041	1015	1023
2200	780	760	772	762	921	798	981	956	963
2400	740	721	733	722	875	753	929	904	911
2600	705	687	698	688	835	714	883	858	865
2800	674	656	667	657	799	679	842	818	824
3000	645	629	639	630	766	648	805	781	787
3200	620	604	613	605	737	620	772	748	754

(3) Acceleration/Deceleration

Speed is specified as the working speed of the sliding table. The sliding table must accelerate to the designated speed to move to the target place, in opposite, it must decelerate before it comes to a stop.
Acceleration/deceleration is programmed by the operator according to the conditions. The acceleraton on a KA system is set at：0.15G calculated for lead = 5, 0.3G is calculated for all other leads. 1G = 9.8mm/s^2, therefore 0.15G = 1470mm/s^2, 0.3G = 2940mm/s^2. The maximum load shown in the catalog is based in this acceleration/deceleration.
＊Attention：Acceleration/deceleration will generate an inertia force on the load. For higher acceleration/deceleration, load will increase accordingly. Moreover, the higher acceleration/deceleration could generate a serious impact, which should be noted.

(4) Working Cycle

The KA system's working cycle is determined by the operator. Generally, the working cycle is calculated as shown on the below diagram. The variables include acceleration time Ta, constant speed time Tc, deceleration time Td, and idling time Tf.

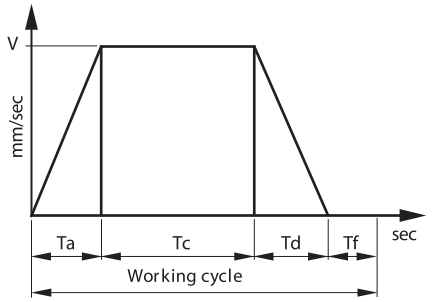

Accelerating Speed＝V/Ta
Decelerating Speed＝V/Td
Working cycle（sec）＝Ta＋Tc＋Td＋Tf
Working time＝working cycle × frequency
Operating ratio＝working time /（working time＋off time）
Operating ratio is closely related to the load of the motor.
Normally, the operating ratio is not recommended to exceed 0.5 for long, continuous work.

3.5 Dynamic Load

Several factors affect the calculation of loads acting on a KA system as shown in the figure below. The dynamic load indicated in the catalog（Fy, Fz, Mx, My, Mz）are calculated based on 10,000 km of travel distance. To obtain the correct load value and maintain the service life of the KA, each load condition should be carefully considered.

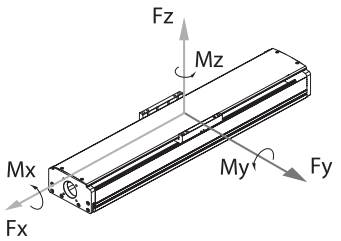

The below figure shows that the load is applied on the center of the KA sliding table. In fact, the load is not necessarily in the middle during it's operation If the load is not on the center, there could be potential vibrations, over torque ,or slow reaction.

To avoid these circumstances, please keep the loading (W) close to the center of the sliding table(O) within the distance(H).

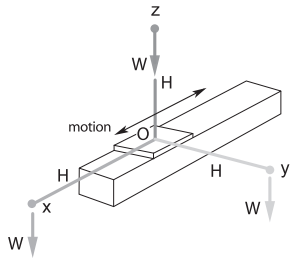

	H (mm)		
Off Center Distance	x	y	z
KA100	550	550	550
KA136	550	550	550
KA170	780	780	780
KA200	900	900	900

3.6 Service Life

The life expectancy of the KA depends on the service life of the linear guideway when it's installed horizontally or tilted less than 30 degrees from a flat surface ; The life expectancy of the KA depends on the service life of the ballscrew or the bearing on the fixed end (whichever one has a lower service life) when it's installed vertically or tilted greater than 30 degrees from a flat surface.
The equivalent dynamic forces (Fy, Fz, Mx, My, Mz) listed in the catalog are calculated based on 10,000 km of travel distance. In cases, when the load is less than the listed loading value (Fy/Fyd + Fz/Fzd + Mx/Mxd + My/Myd + Mz/Mzd ≦ 1) , the service life can be extended longer; as opposed to the actual load being greater than the listed loading value, which can shorten the service life. It is recommended to keep the load under the listed value to ensure the service life of the KA module.

3.7 Installation Method

There are several installation methods for the KA series as shown in the following figures.

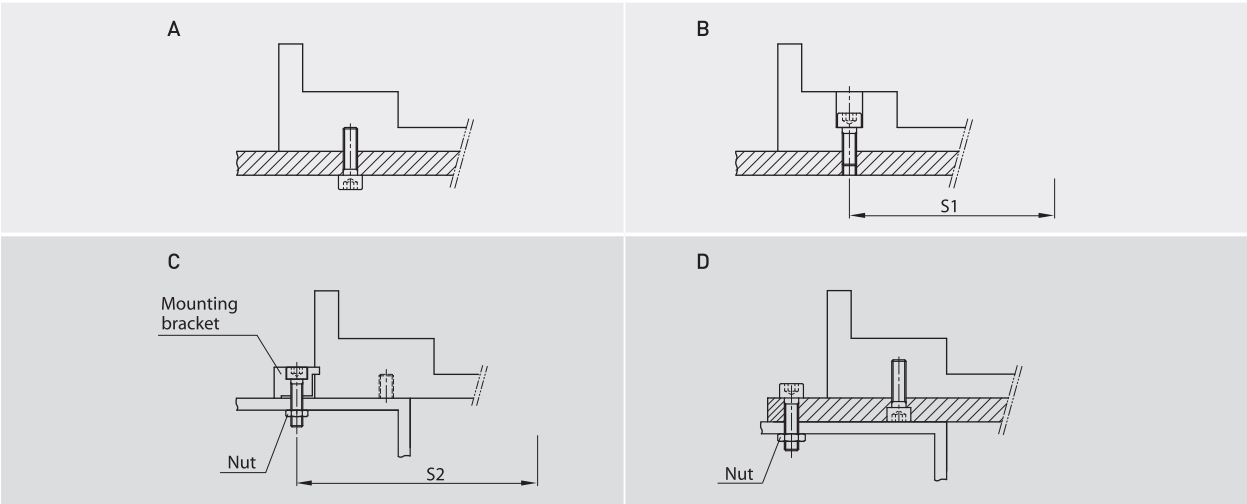

The table indicates the distance between fixing screws (S1) on type B (fixing from above):

KA Model	S1	Screw
KA100	80	M5
KA136	112	M6
KA170	136	M8
KA200	162	M8

3.8 Maintenance Cycle

The parts requiring maintenance in a KA system include the ballscrew, guideway and accessories. Please check for any dirt or debris inside the system every 3 months or 100km of distance traveled. Adding lubricant to both the ballscrew and guideway is essential, in addition, to changing the grease if it is getting dirty. Please contact HIWIN for any concerns on maintenance.

3.9 KA Series

3.9.1 Model Number for KA100

KA100	-20	P	-1050	A	F0	U	S1	M	V
Model	Lead	Precision Grade	Effective Stroke	Load Type	Motor Flange	Cover	Limit Switch	Motor	Installation
	5 mm 10 mm 20 mm	P: Precision C: Normal		A: Standard	F0 : Direct	U: Without Cover None : Standard Cover	S1: Omron SX671 S2: Omron SX674 S3: Sunx GL-12F S4: Sunx GL-N12F-PX10 None: Without Sensor	M: Supplied With Motor None: Without Motor	V : Vertical Install None: Horizontal Install

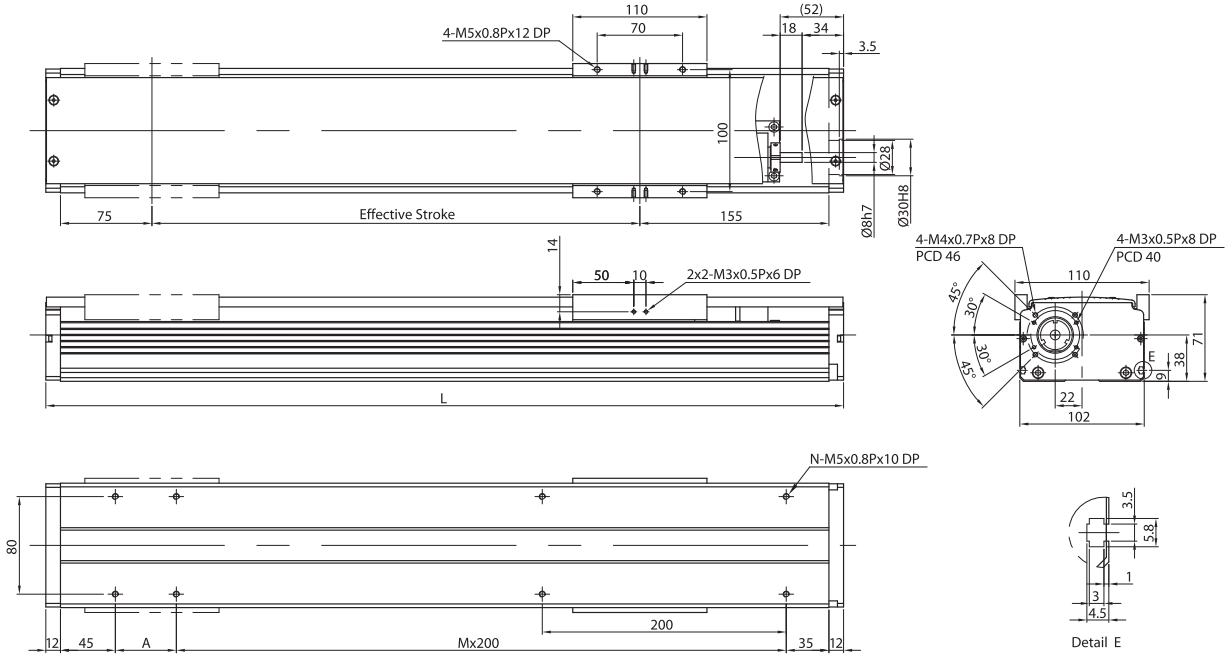

Effective stroke (mm)	L	A	M	N	Weight (kg)
100	354	50	1	6	4.86
150	404	100	1	6	5.34
200	454	150	1	6	5.81
250	504	200	1	6	6.29
300	554	50	2	8	6.77
350	604	100	2	8	7.25
400	654	150	2	8	7.73
450	704	200	2	8	8.2
500	754	50	3	10	8.67
550	804	100	3	10	9.15
600	854	150	3	10	9.63
650	904	200	3	10	10.11
700	954	50	4	12	10.59
750	1004	100	4	12	11.06
800	1054	150	4	12	11.54
850	1104	200	4	12	12.02
900	1154	50	5	14	12.49
950	1204	100	5	14	12.97
1000	1254	150	5	14	13.45
1050	1304	200	5	14	13.93

AC motor output			W	100	
Ballscrew / Drive				? 15C7/QHH25HA	
Lead			mm	5	10	20
Max linear speed*			mm/sec	263	525	1050
Max RPM			RPM	3150	3150	3150
Rated thrust			N	356	178	89
Repeatability			mm	±0.02		
Effective stroke			mm	100~1050		
Rated dynamic load**	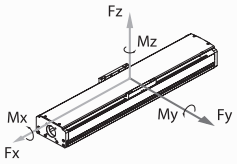	Fyd	N	714		
		Fzd	N	1224		
		Mxd	N-m	38.5		
		Myd	N-m	34.7		
		Mzd	N-m	34.7		
Permitted load condition***	$\frac{Fy}{Fyd}+\frac{Fz}{Fzd}+\frac{Mx}{Mxd}+\frac{My}{Myd}+\frac{Mz}{Mzd}\leq 1$ Fy, Fz, Mx, My, Mz are working loads				

* Vibration might occur when the effective stroke is longer than 700mm.
The maximum speed should be decreased by 15% for every 100mm of increased stroke.
** The load condition is based on 10,000km operation.
*** If used on the vertical axis or in a special condition, please contact HIWIN.

3.9.2 Model Number for KA100-FD

KA100	-20	P	-1050	A	FD	U	S1	M	V
Model	Lead	Precision Grade	Effective Stroke	Load Type	Motor Flange	Cover	Limit Switch	Motor	Installation
	5 mm 10 mm 20 mm	P: Precision C: Normal		A: Standard	FD: Bottom	U: Without Cover None : Standard Cover	S1: Omron SX671 S2: Omron SX674 S3: Sunx GL-12F S4: Sunx GL-N12F-PX10 None: Without Sensor	M: Supplied With Motor None: Without Motor	V : Vertical install None: Horizontal Install

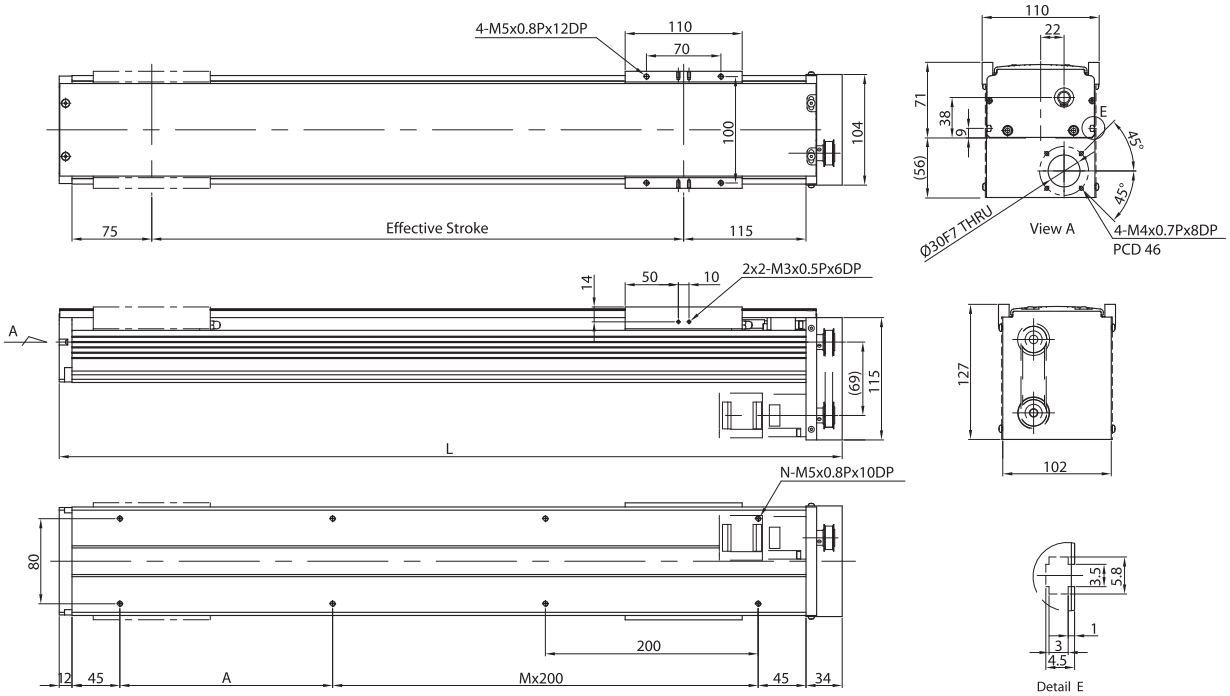

Effective stroke (mm)	L	A	M	N	Weight (kg)
100	336	200	0	4	4.91
150	386	50	1	6	5.41
200	436	100	1	6	5.88
250	486	150	1	6	6.36
300	536	200	1	6	6.85
350	586	50	2	8	7.33
400	636	100	2	8	7.82
450	686	150	2	8	8.29
500	736	200	2	8	8.76
550	786	50	3	10	9.25
600	836	100	3	10	9.73
650	886	150	3	10	10.22
700	936	200	3	10	10.71
750	986	50	4	12	11.19
800	1036	100	4	12	11.67
850	1086	150	4	12	12.15
900	1136	200	4	12	12.63
950	1186	50	5	14	13.12
1000	1236	100	5	14	13.6
1050	1286	150	5	14	14.08

AC motor output			W	100	
Ballscrew / Drive				Φ15C7/QHH25HA	
Lead			mm	5	10	20
Max linear speed*			mm/sec	263	525	1050
Max RPM			RPM	3150	3150	3150
Rated thrust			N	356	178	89
Repeatability			mm	±0.02		
Effective stroke			mm	100~1050		
Rated dynamic load**	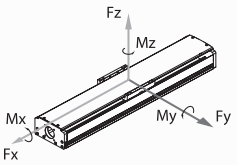	Fyd	N	714		
		Fzd	N	1224		
		Mxd	N-m	38.5		
		Myd	N-m	34.7		
		Mzd	N-m	34.7		
Permitted load condition***	$\frac{Fy}{Fyd}+\frac{Fz}{Fzd}+\frac{Mx}{Mxd}+\frac{My}{Myd}+\frac{Mz}{Mzd}\leq 1$ Fy, Fz, Mx, My, Mz are working loads				

* Vibration might occur when the effective stroke is longer than 700mm.
The maximum speed should be decreased by 15% for every 100mm of increased stroke.
** The load condition is based on 10,000km operation.
*** If used on the vertical axis or in a special condition, please contact HIWIN.

3.9.3 Model Number for KA100-FI

KA100	-20	P	-1050	A	FI	U	S1	M	V
Model	Lead	Precision Grade	Effective Stroke	Load Type	Motor Flange	Cover	Limit Switch	Motor	Installation
	5 mm 10 mm 20 mm	P: Precision C: Normal		A: Standard	FI : Internal	U: Without Cover None : Standard Cover	S1: Omron SX671 S2: Omron SX674 S3: Sunx GL-12F S4: Sunx GL-N12F-PX10 None: Without Sensor	M: Supplied With Motor None: Without Motor	V : Vertical Install None: Horizontal Install

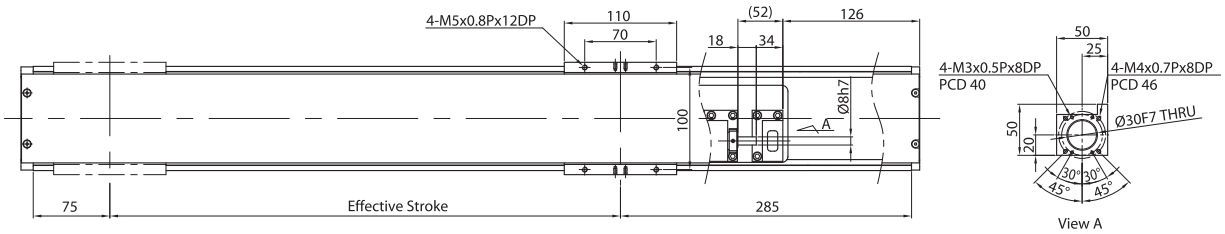

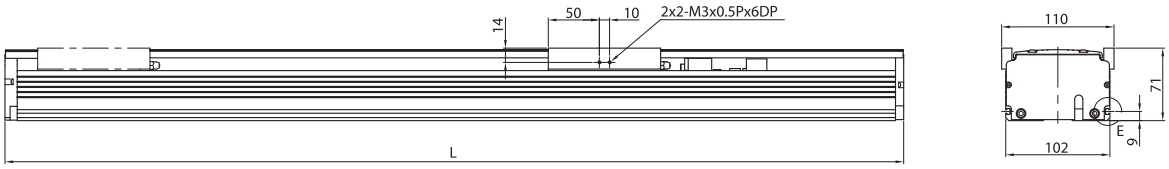

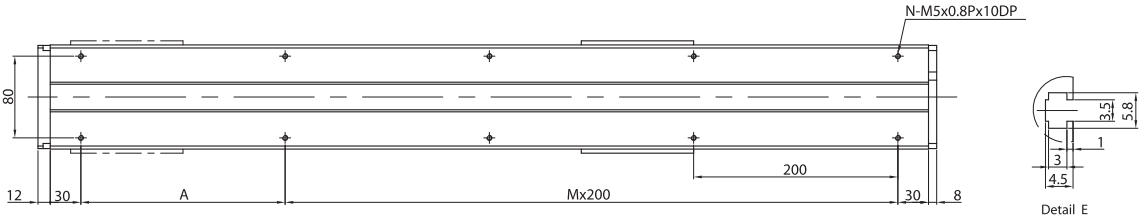

Effective stroke (mm)	L	A	M	N	Weight (kg)
100	480	200	1	6	5.2
150	530	50	2	8	5.71
200	580	100	2	8	6.22
250	630	150	2	8	6.73
300	680	200	2	8	7.24
350	730	50	3	10	7.76
400	780	100	3	10	8.27
450	830	150	3	10	8.77
500	880	200	3	10	9.28
550	930	50	4	12	9.79
600	980	100	4	12	10.31
650	1030	150	4	12	10.82
700	1080	200	4	12	11.33
750	1130	50	5	14	11.83
800	1180	100	5	14	12.35
850	1230	150	5	14	12.86
900	1280	200	5	14	13.37
950	1330	50	6	16	13.88
1000	1380	100	6	16	14.39
1050	1430	150	6	16	14.91

AC motor output			W	100	
Ballscrew / Drive				Φ15C7/QHH25HA	
Lead			mm	5	10	20
Max linear speed*			mm/sec	263	525	1050
Max RPM			RPM	3150	3150	3150
Rated thrust			N	356	178	89
Repeatability			mm	±0.02
Effective stroke			mm	100~1050
Rated dynamic load**	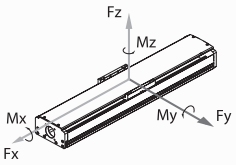	Fyd	N	714
		Fzd	N	1224
		Mxd	N-m	38.5
		Myd	N-m	34.7
		Mzd	N-m	34.7
Permitted load condition***	$\frac{Fy}{Fyd}+\frac{Fz}{Fzd}+\frac{Mx}{Mxd}+\frac{My}{Myd}+\frac{Mz}{Mzd}\leq 1$ Fy, Fz, Mx, My, Mz are working loads			

* Vibration might occur when the effective stroke is longer than 700mm.
The maximum speed should be decreased by 15% for every 100mm of increased stroke.
** The load condition is based on 10,000km operation.
*** If used on the vertical axis or in a special condition, please contact HIWIN.

3.9.4 Model Number for KA100-FL

KA100	-20	P	-1050	A	FL	U	S1	M	V
Model	Lead	Precision Grade	Effective Stroke	Load Type	Motor Flange	Cover	Limit Switch	Motor	Installation
	5 mm 10 mm 20 mm	P: Precision C: Normal		A: Standard	FL: Left	U: Without Cover None : Standard Cover	S1: Omron SX671 S2: Omron SX674 S3: Sunx GL-12F S4: Sunx GL-N12F-PX10 None: Without Sensor	M: Supplied With Motor None: Without Motor	V : Vertical Install None: Horizontal Install

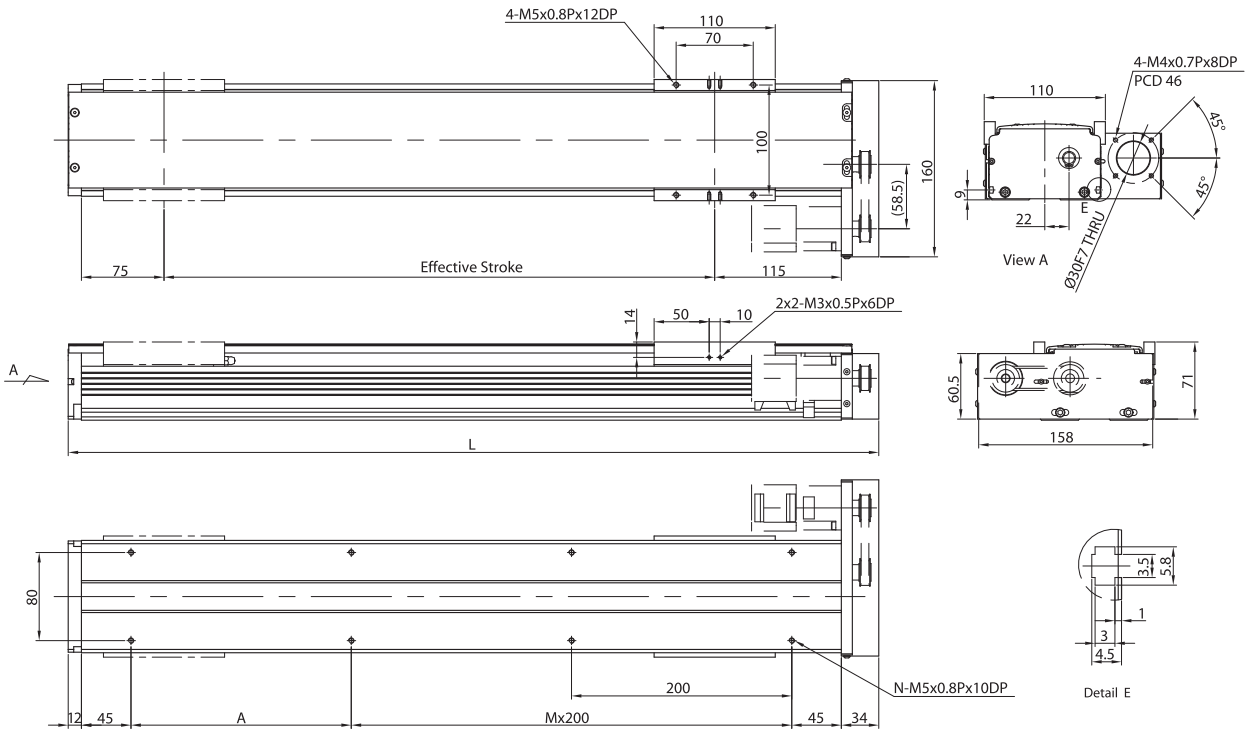

Effective stroke (mm)	L	A	M	N	Weight (kg)
100	336	200	0	4	4.91
150	386	50	1	6	5.41
200	436	100	1	6	5.88
250	486	150	1	6	6.36
300	536	200	1	6	6.85
350	586	50	2	8	7.33
400	636	100	2	8	7.82
450	686	150	2	8	8.29
500	736	200	2	8	8.76
550	786	50	3	10	9.25
600	836	100	3	10	9.73
650	886	150	3	10	10.22
700	936	200	3	10	10.71
750	986	50	4	12	11.19
800	1036	100	4	12	11.67
850	1086	150	4	12	12.15
900	1136	200	4	12	12.63
950	1186	50	5	14	13.12
1000	1236	100	5	14	13.6
1050	1286	150	5	14	14.08

AC motor output			W	100	
Ballscrew / Drive				Φ15C7/QHH25HA	
Lead			mm	5	10	20
Max linear speed*			mm/sec	263	525	1050
Max RPM			RPM	3150	3150	3150
Rated thrust			N	356	178	89
Repeatability			mm	±0.02		
Effective stroke			mm	100~1050		
Rated dynamic load**	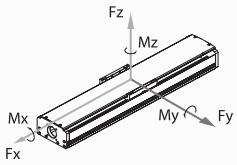	Fyd	N	714		
		Fzd	N	1224		
		Mxd	N-m	38.5		
		Myd	N-m	34.7		
		Mzd	N-m	34.7		
Permitted load condition***	$\frac{Fy}{Fyd}+\frac{Fz}{Fzd}+\frac{Mx}{Mxd}+\frac{My}{Myd}+\frac{Mz}{Mzd}\leq 1$ Fy, Fz, Mx, My, Mz are working loads				

* Vibration might occur when the effective stroke is longer than 700mm.
The maximum speed should be decreased by 15% for every 100mm of increased stroke.
** The load condition is based on 10,000km operation.
*** If used on the vertical axis or in a special condition, please contact HIWIN.

3.9.5 Model Number for KA100-FR

KA100	-20	P	-1050	A	FR	U	S1	M	V
Model	Lead	Precision Grade	Effective Stroke	Load Type	Motor Flange	Cover	Limit Switch	Motor	Installation
	5 mm 10 mm 20 mm	P: Precision C: Normal		A: Standard	FR: Right	U: Without Cover None : Standard Cover	S1: Omron SX671 S2: Omron SX674 S3: Sunx GL-12F S4: Sunx GL-N12F-PX10 None: Without Sensor	M: Supplied With Motor None: Without Motor	V : Vertical Install None: Horizontal Install

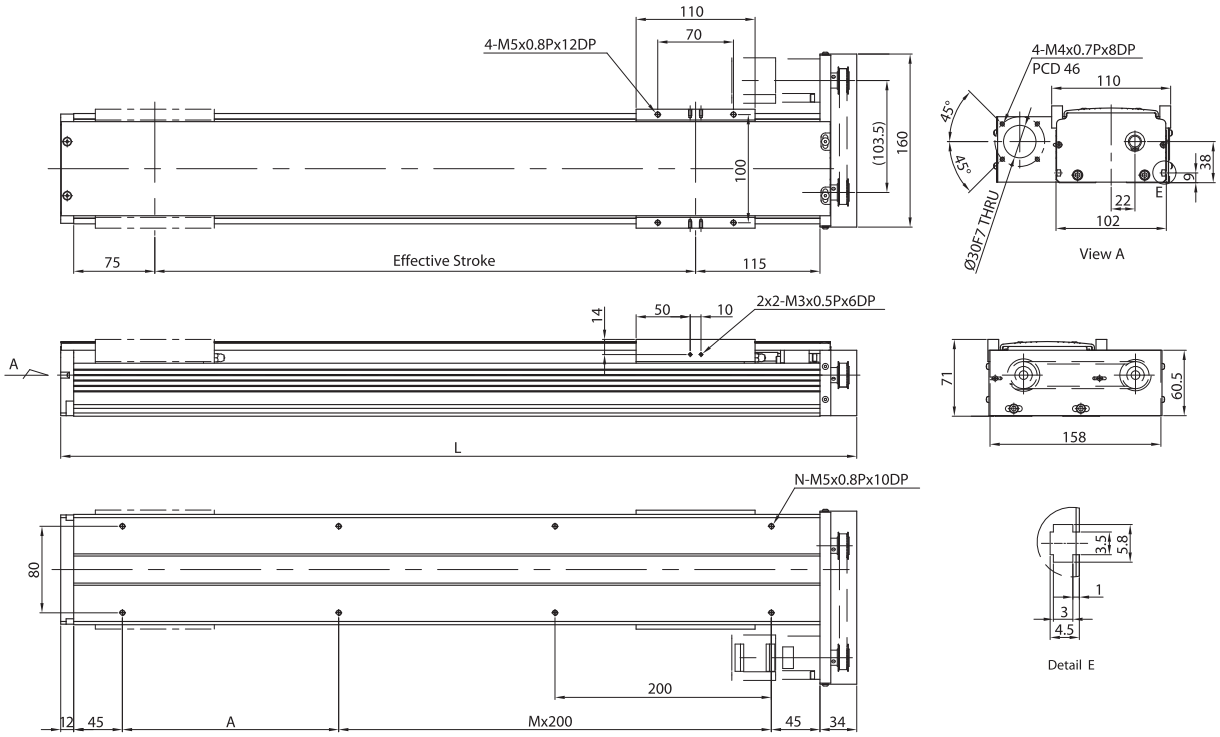

Effective stroke (mm)	L	A	M	N	Weight (kg)
100	336	200	0	4	4.91
150	386	50	1	6	5.41
200	436	100	1	6	5.88
250	486	150	1	6	6.36
300	536	200	1	6	6.85
350	586	50	2	8	7.33
400	636	100	2	8	7.82
450	686	150	2	8	8.29
500	736	200	2	8	8.76
550	786	50	3	10	9.25
600	836	100	3	10	9.73
650	886	150	3	10	10.22
700	936	200	3	10	10.71
750	986	50	4	12	11.19
800	1036	100	4	12	11.67
850	1086	150	4	12	12.15
900	1136	200	4	12	12.63
950	1186	50	5	14	13.12
1000	1236	100	5	14	13.6
1050	1286	150	5	14	14.08

AC motor output			W	100	
Ballscrew / Drive				Φ15C7/QHH25HA	
Lead			mm	5	10	20
Max linear speed*			mm/sec	263	525	1050
Max RPM			RPM	3150	3150	3150
Rated thrust			N	356	178	89
Repeatability			mm	±0.02		
Effective stroke			mm	100~1050		
Rated dynamic load**	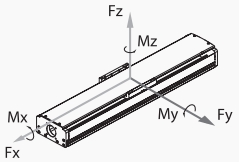	Fyd	N	714		
		Fzd	N	1224		
		Mxd	N-m	38.5		
		Myd	N-m	34.7		
		Mzd	N-m	34.7		
Permitted load condition***	$\frac{Fy}{Fyd}+\frac{Fz}{Fzd}+\frac{Mx}{Mxd}+\frac{My}{Myd}+\frac{Mz}{Mzd}\leq 1$ Fy, Fz, Mx, My, Mz are working loads				

* Vibration might occur when the effective stroke is longer than 700mm.
The maximum speed should be decreased by 15% for every 100mm of increased stroke.
** The load condition is based on 10,000km operation.
*** If used on the vertical axis or in a special condition, please contact HIWIN.

3.9.6 Model Number for KA100B-FL

KA100	B	-84	C	-3000	A	FL	U	S1	M
Model	Timing Belt	Lead	Precision Grade	Effective Stroke	Load Type	Motor Flange	Cover	Limit Switch	Motor
			C: Normal		A: Standard	FL: Left	U: Without Cover None : Standard Cover	S1: Omron SX671 S2: Omron SX674 S3: Sunx GL-12F S4: Sunx GL-N12F-PX10 None: Without Sensor	M: Supplied With Motor None: Without Motor

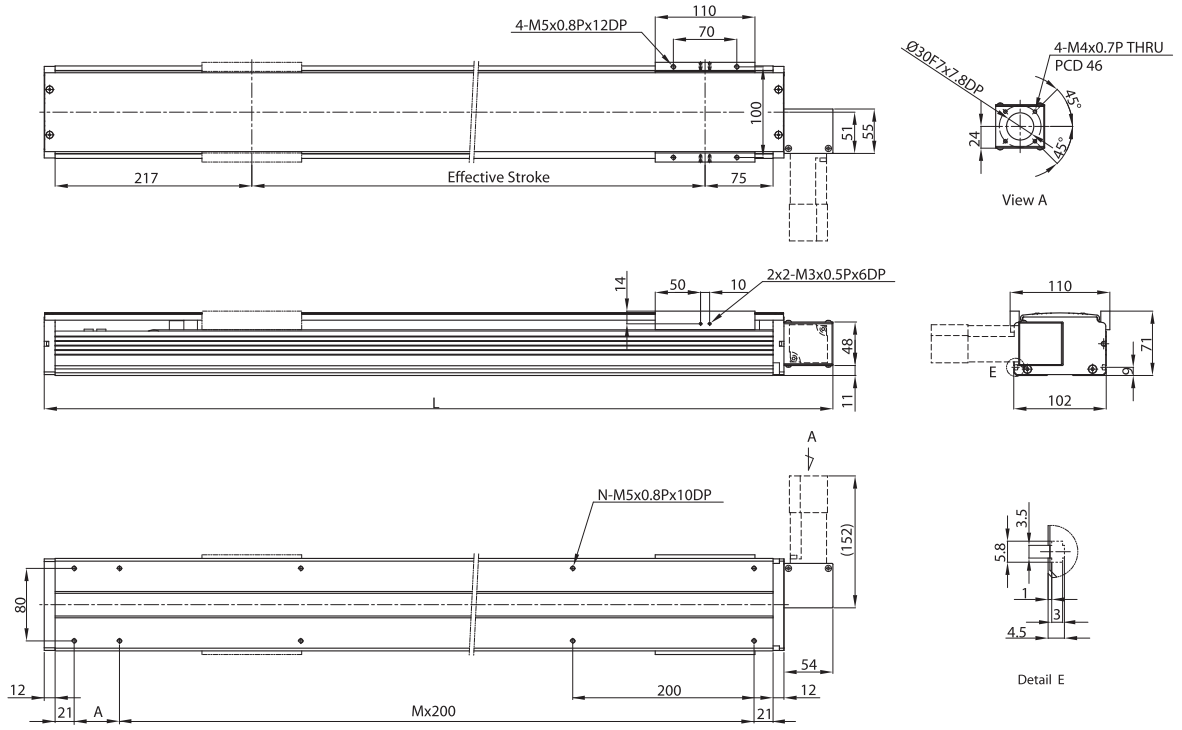

Effective stroke (mm)	L	A	M	N	Weight (kg)
200	570	50	2	8	5.41
400	770	50	3	10	7.07
600	970	50	4	12	8.83
800	1170	50	5	14	10.49
1000	1370	50	6	16	12.15
1200	1570	50	7	18	13.91
1400	1770	50	8	20	15.57
1600	1970	50	9	22	17.33
1800	2170	50	10	24	18.99
2000	2370	50	11	26	20.65
2200	2570	50	12	28	22.41
2400	2770	50	13	30	24.07
2600	2970	50	14	32	25.83
2800	3170	50	15	34	27.49
3000	3370	50	16	36	29.15

AC motor output			W	100
Ballscrew / Drive				HTD 3M/QHH25HA
Lead			mm	84
Max linear speed			mm/sec	1800
Rated thrust			N	33
Repeatability			mm	±0.1
Effective stroke			mm	200~3000
Rated dynamic load*	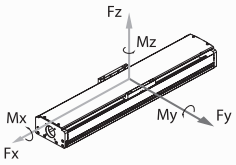	Fyd	N	714
		Fzd	N	1224
		Mxd	N-m	38.5
		Myd	N-m	34.7
		Mzd	N-m	34.7
Permitted load condition**	$\frac{Fy}{Fyd}+\frac{Fz}{Fzd}+\frac{Mx}{Mxd}+\frac{My}{Myd}+\frac{Mz}{Mzd}\leq 1$ Fy, Fz, Mx, My, Mz Mz are working loads			

*The load condition is based on 10,000km operation
**For horizontal application only. If used in special condition, please contact HIWIN.

3.9.7 Model Number for KA100B-FR

KA100	B	-84	C	-3000	A	FR	U	S1	M
Model	Timing Belt	Lead	Precision Grade	Effective Stroke	Load Type	Motor Flange	Cover	Limit Switch	Motor
			C: Normal		A: Standard	FR: Right	U: Without Cover None : Standard Cover	S1: Omron SX671 S2: Omron SX674 S3: Sunx GL-12F S4: Sunx GL-N12F-PX10 None: Without Sensor	M: Supplied With Motor None: Without Motor

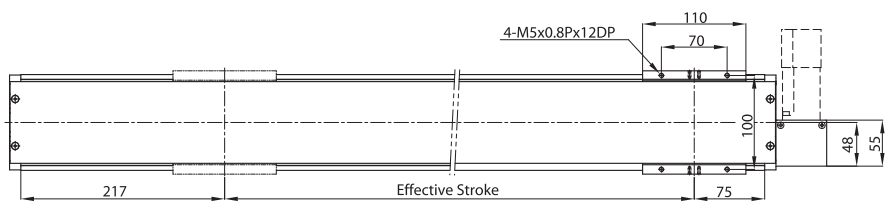

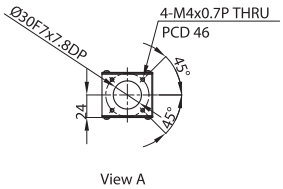

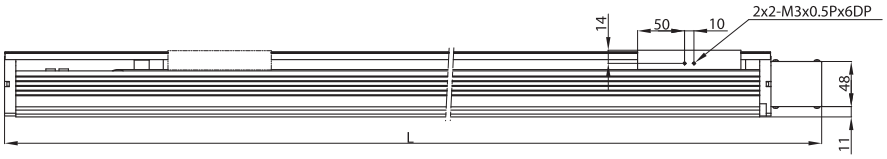

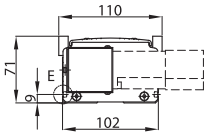

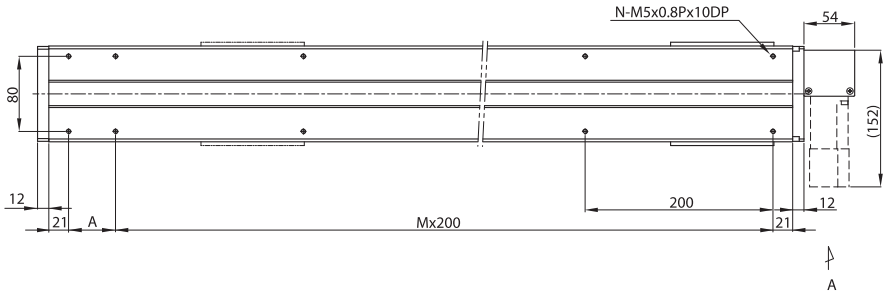

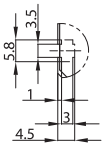

Effective stroke (mm)	L	A	M	N	Weight (kg)
200	570	50	2	8	5.41
400	770	50	3	10	7.07
600	970	50	4	12	8.83
800	1170	50	5	14	10.49
1000	1370	50	6	16	12.15
1200	1570	50	7	18	13.91
1400	1770	50	8	20	15.57
1600	1970	50	9	22	17.33
1800	2170	50	10	24	18.99
2000	2370	50	11	26	20.65
2200	2570	50	12	28	22.41
2400	2770	50	13	30	24.07
2600	2970	50	14	32	25.83
2800	3170	50	15	34	27.49
3000	3370	50	16	36	29.15

AC motor output		W	100
Timing Belt / Drive			HTD 3M/QHH25HA
Lead		mm	84
Max linear speed		mm/sec	1800
Rated thrust		N	33
Repeatability		mm	±0.1
Effective stroke		mm	200~3000
Rated dynamic load*	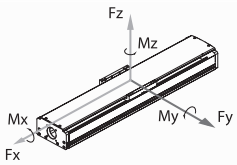	Fyd	N	714
		Fzd	N	1224
		Mxd	N-m	38.5
		Myd	N-m	34.7
		Mzd	N-m	34.7
Permitted load condition**	$\frac{Fy}{Fyd}+\frac{Fz}{Fzd}+\frac{Mx}{Mxd}+\frac{My}{Myd}+\frac{Mz}{Mzd}\leq 1$ Fy, Fz, Mx, My, Mz Mz are working loads		

*The load condition is based on 10,000km operation
**For horizontal application only. If used in special condition, please contact HIWIN.

3.9.8 Model Number for KA136

KA136	-20	P	-1050	A	F0	U	S1	M	V
Model	Lead	Precision Grade	Effective Stroke	Load Type	Motor Flange	Cover	Limit Switch	Motor	Installation
	5 mm 10 mm 20 mm	P: Precision C: Normal		A: Standard	F0 : Direct	U: Without Cover None : Standard Cover	S1: Omron SX671 S2: Omron SX674 S3: Sunx GL-12F S4: Sunx GL-N12F-PX10 None: Without Sensor	M: Supplied With Motor None: Without Motor	V : Vertical Install None: Horizontal Install

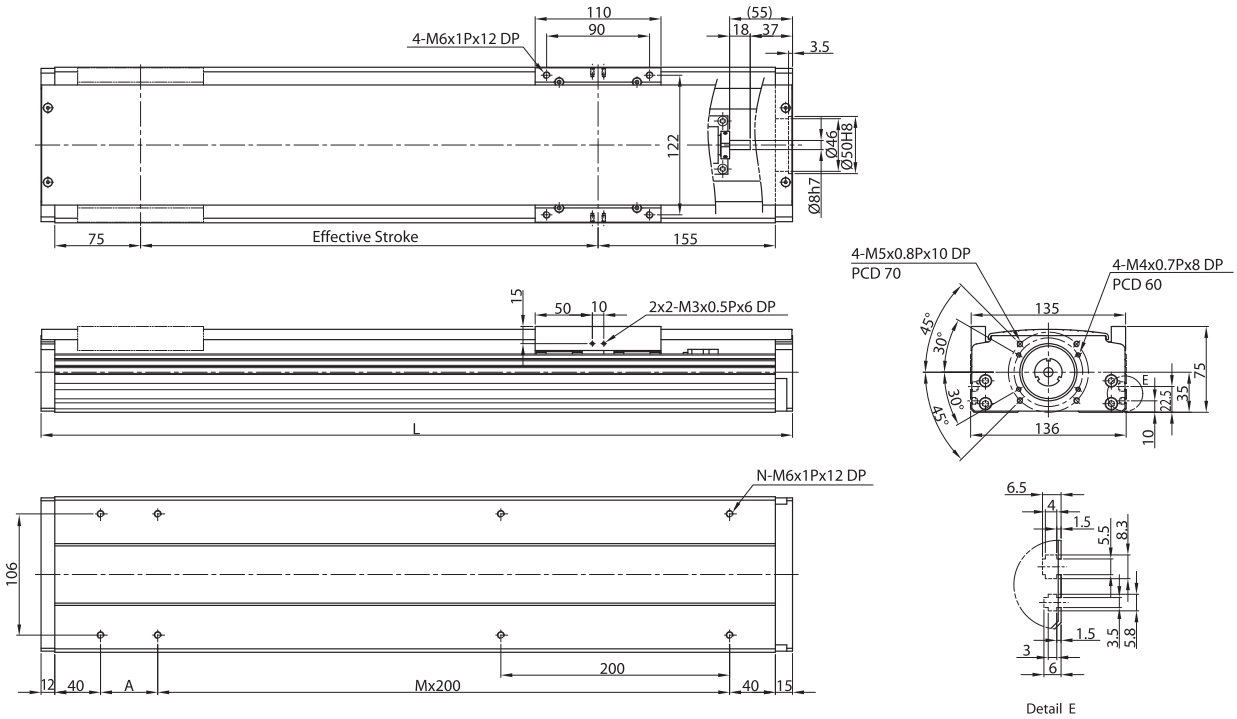

Effective stroke (mm)	L	A	M	N	Weight (kg)
100	357	50	1	6	6.19
150	407	100	1	6	6.74
200	457	150	1	6	7.29
250	507	200	1	6	7.84
300	557	50	2	8	8.39
350	607	100	2	8	8.94
400	657	150	2	8	9.49
450	707	200	2	8	10.05
500	757	50	3	10	10.6
550	807	100	3	10	11.15
600	857	150	3	10	11.7
650	907	200	3	10	12.25
700	957	50	4	12	12.8
750	1007	100	4	12	13.35
800	1057	150	4	12	13.9
850	1107	200	4	12	14.45
900	1157	50	5	14	15
950	1207	100	5	14	15.55
1000	1257	150	5	14	16.1
1050	1307	200	5	14	16.65

AC motor output			W	200	
Ballscrew / Drive				Φ15C7/QEH15SA	
Lead			mm	5	10	20
Max linear speed*			mm/sec	263	525	1050
Max RPM			RPM	3150	3150	3150
Rated thrust			N	712	356	178
Repeatability			mm	±0.02		
Effective stroke			mm	100~1050		
Rated dynamic load**	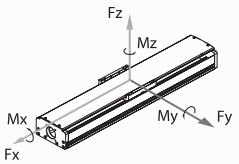	Fyd	N	1838		
		Fzd	N	2927		
		Mxd	N-m	123		
		Myd	N-m	99.5		
		Mzd	N-m	99.5		
Permitted load condition***	$\frac{Fy}{Fyd}+\frac{Fz}{Fzd}+\frac{Mx}{Mxd}+\frac{My}{Myd}+\frac{Mz}{Mzd}\leq 1$ Fy, Fz, Mx, My, Mz are working loads				

* Vibration might occur when the effective stroke is longer than 700mm.
The maximum speed should be decreased by 15% for every 100mm of increased stroke.
** The load condition is based on 10,000km operation.
*** If used on the vertical axis or in a special condition, please contact HIWIN.

3.9.9 Model Number for KA136-FD

KA136	-20	P	-1050	A	FD	U	S1	M	V
Model	Lead	Precision Grade	Effective Stroke	Load Type	Motor Flange	Cover	Limit Switch	Motor	Installation
	5 mm 10 mm 20 mm	P: Precision C: Normal		A: Standard	FD: Bottom	U: Without Cover None : Standard Cover	S1: Omron SX671 S2: Omron SX674 S3: Sunx GL-12F S4: Sunx GL-N12F-PX10 None: Without Sensor	M: Supplied With Motor None: Without Motor	V : Vertical Install None: Horizontal Install

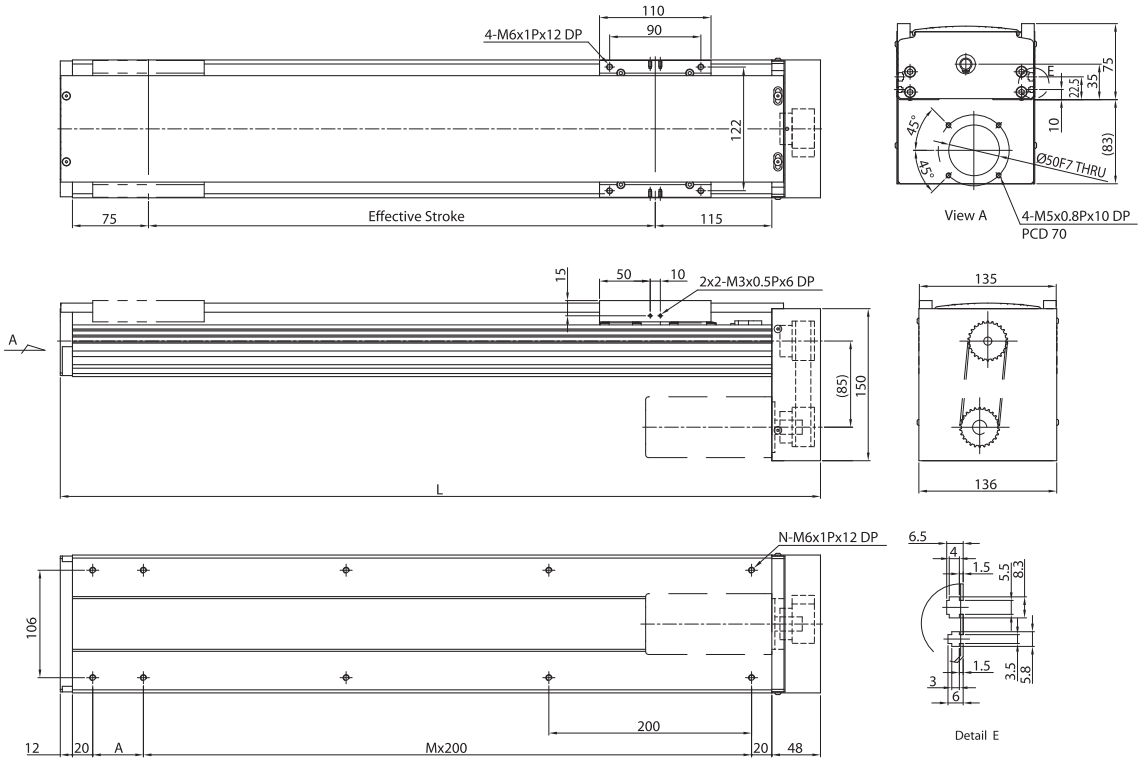

Effective stroke (mm)	L	A	M	N	Weight (kg)
100	350	50	1	6	6.31
150	400	100	1	6	6.88
200	450	150	1	6	7.44
250	500	200	1	6	8.01
300	550	50	2	8	8.56
350	600	100	2	8	9.12
400	650	150	2	8	9.68
450	700	200	2	8	10.25
500	750	50	3	10	10.81
550	800	100	3	10	11.37
600	850	150	3	10	11.94
650	900	200	3	10	12.51
700	950	50	4	12	13.06
750	1000	100	4	12	13.62
800	1050	150	4	12	14.18
850	1100	200	4	12	14.74
900	1150	50	5	14	15.3
950	1200	100	5	14	15.86
1000	1250	150	5	14	16.42
1050	1300	200	5	14	16.98

AC motor output			W	200	
Ballscrew / Drive				Φ15C7/QEH15SA	
Lead			mm	5	10	20
Max linear speed*			mm/sec	263	525	1050
Max RPM			RPM	3150	3150	3150
Rated thrust			N	712	356	178
Repeatability			mm	±0.02		
Effective stroke			mm	100~1050		
Rated dynamic load**	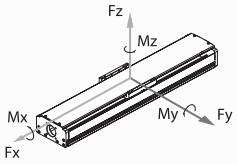	Fyd	N	1838		
		Fzd	N	2927		
		Mxd	N-m	123		
		Myd	N-m	99.5		
		Mzd	N-m	99.5		
Permitted load condition***	$\frac{Fy}{Fyd}+\frac{Fz}{Fzd}+\frac{Mx}{Mxd}+\frac{My}{Myd}+\frac{Mz}{Mzd}\leq 1$ Fy, Fz, Mx, My, Mz are working loads				

* Vibration might occur when the effective stroke is longer than 700mm.
The maximum speed should be decreased by 15% for every 100mm of increased stroke.
** The load condition is based on 10,000km operation.
*** If used on the vertical axis or in a special condition, please contact HIWIN.

3.9.10 Model Number for KA136-FI

KA136	-20	P	-1050	A	FI	U	S1	M	V
Model	Lead	Precision Grade	Effective Stroke	Load Type	Motor Flange	Cover	Limit Switch	Motor	Installation
	5 mm 10 mm 20 mm	P: Precision C: Normal		A: Standard	FI : Internal	U: Without Cover None : Standard Cover	S1: Omron SX671 S2: Omron SX674 S3: Sunx GL-12F S4: Sunx GL-N12F-PX10 None: Without Sensor	M: Supplied With Motor None: Without Motor	V : Vertical Install None: Horizontal Install

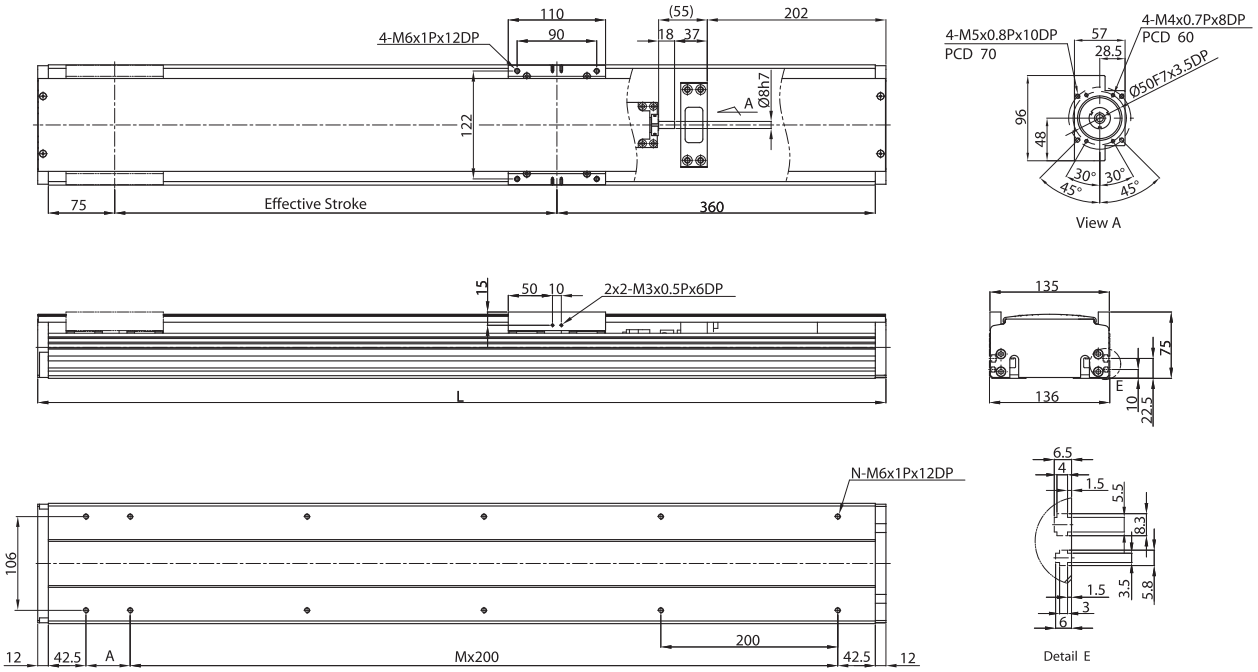

Effective stroke (mm)	L	A	M	N	Weight (kg)
100	559	50	2	8	6.62
150	609	100	2	8	7.21
200	659	150	2	8	7.8
250	709	200	2	8	8.39
300	759	50	3	10	8.98
350	809	100	3	10	9.57
400	859	150	3	10	10.15
450	909	200	3	10	10.75
500	959	50	4	12	11.34
550	1009	100	4	12	11.93
600	1059	150	4	12	12.52
650	1109	200	4	12	13.11
700	1159	50	5	14	13.71
750	1209	100	5	14	14.29
800	1259	150	5	14	14.87
850	1309	200	5	14	15.46
900	1359	50	6	16	16.05
950	1409	100	6	16	16.64
1000	1459	150	6	16	17.23
1050	1509	200	6	16	17.82

AC motor output			W	200	
Ballscrew / Drive				Φ15C7/QEH15SA	
Lead			mm	5	10	20
Max linear speed*			mm/sec	263	525	1050
Max RPM			RPM	3150	3150	3150
Rated thrust			N	712	356	178
Repeatability			mm	±0.02		
Effective stroke			mm	100~1050		
Rated dynamic load**	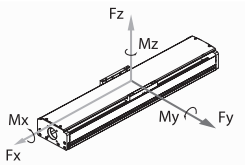	Fyd	N	1838		
		Fzd	N	2927		
		Mxd	N-m	123		
		Myd	N-m	99.5		
		Mzd	N-m	99.5		
Permitted load condition***	$\frac{Fy}{Fyd}+\frac{Fz}{Fzd}+\frac{Mx}{Mxd}+\frac{My}{Myd}+\frac{Mz}{Mzd}\leq 1$ Fy, Fz, Mx, My, Mz are working loads				

* Vibration might occur when the effective stroke is longer than 700mm.
The maximum speed should be decreased by 15% for every 100mm of increased stroke.
** The load condition is based on 10,000km operation.
*** If used on the vertical axis or in a special condition, please contact HIWIN.

3.9.11 Model Number for KA136-FL

KA136	-20	P	-1050	A	FL	U	S1	M	V
Model	Lead	Precision Grade	Effective Stroke	Load Type	Motor Flange	Cover	Limit Switch	Motor	Installation
	5 mm 10 mm 20 mm	P: Precision C: Normal		A: Standard	FL: Left	U: Without Cover None : Standard Cover	S1: Omron SX671 S2: Omron SX674 S3: Sunx GL-12F S4: Sunx GL-N12F-PX10 None: Without Sensor	M: Supplied With Motor None: Without Motor	V : Vertical Install None: Horizontal Install

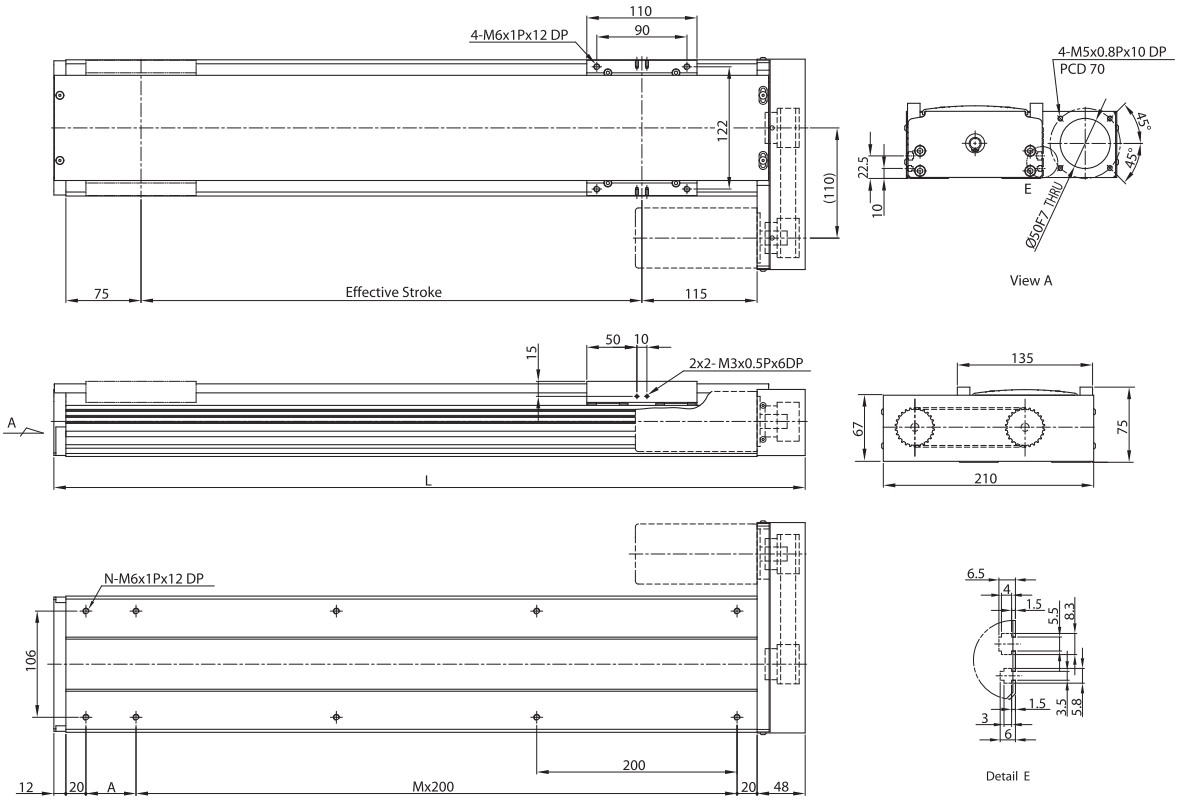

Effective stroke (mm)	L	A	M	N	Weight (kg)
100	350	50	1	6	6.31
150	400	100	1	6	6.88
200	450	150	1	6	7.44
250	500	200	1	6	8.01
300	550	50	2	8	8.56
350	600	100	2	8	9.12
400	650	150	2	8	9.68
450	700	200	2	8	10.25
500	750	50	3	10	10.81
550	800	100	3	10	11.37
600	850	150	3	10	11.94
650	900	200	3	10	12.51
700	950	50	4	12	13.06
750	1000	100	4	12	13.62
800	1050	150	4	12	14.18
850	1100	200	4	12	14.74
900	1150	50	5	14	15.3
950	1200	100	5	14	15.86
1000	1250	150	5	14	16.42
1050	1300	200	5	14	16.98

AC motor output			W	200	
Ballscrew / Drive				Φ15C7/QEH15SA	
Lead			mm	5	10	20
Max linear speed*			mm/sec	263	525	1050
Max RPM			RPM	3150	3150	3150
Rated thrust			N	712	356	178
Repeatability			mm	±0.02		
Effective stroke			mm	100~1050		
Rated dynamic load**	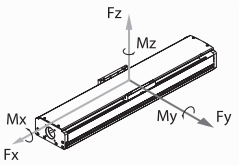	Fyd	N	1838		
		Fzd	N	2927		
		Mxd	N-m	123		
		Myd	N-m	99.5		
		Mzd	N-m	99.5		
Permitted load condition***	$\frac{Fy}{Fyd}+\frac{Fz}{Fzd}+\frac{Mx}{Mxd}+\frac{My}{Myd}+\frac{Mz}{Mzd}\leq 1$ Fy, Fz, Mx, My, Mz are working loads				

* Vibration might occur when the effective stroke is longer than 700mm.
The maximum speed should be decreased by 15% for every 100mm of increased stroke.
** The load condition is based on 10,000km operation.
*** If used on the vertical axis or in a special condition, please contact HIWIN.

3.9.12 Model Number for KA136-FR

KA136	-20	P	-1050	A	FR	U	S1	M	V
Model	Lead	Precision Grade	Effective Stroke	Load Type	Motor Flange	Cover	Limit Switch	Motor	Installation
	5 mm 10 mm 20 mm	P: Precision C: Normal		A: Standard	FR: Right	U: Without Cover None : Standard Cover	S1: Omron SX671 S2: Omron SX674 S3: Sunx GL-12F S4: Sunx GL-N12F-PX10 None: Without Sensor	M: Supplied With Motor None: Without Motor	V : Vertical Install None: Horizontal Install

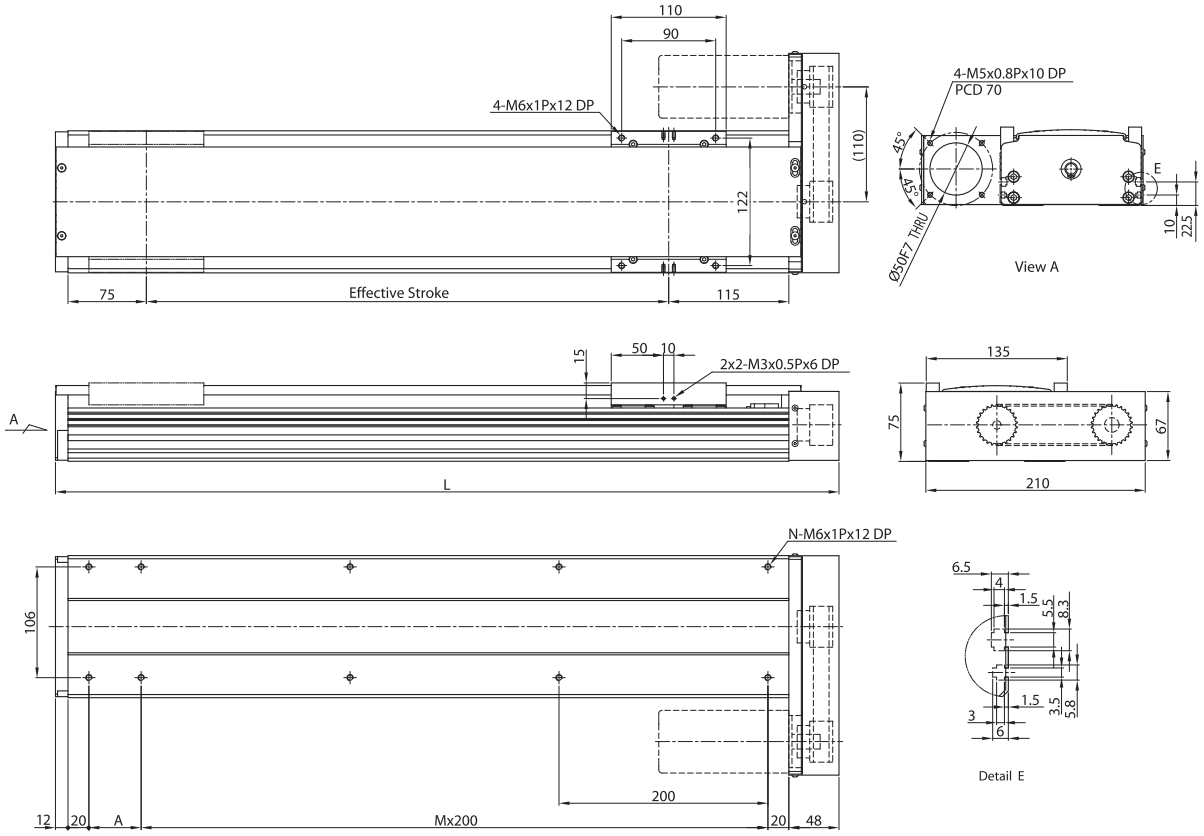

Effective stroke (mm)	L	A	M	N	Weight (kg)
100	350	50	1	6	6.31
150	400	100	1	6	6.88
200	450	150	1	6	7.44
250	500	200	1	6	8.01
300	550	50	2	8	8.56
350	600	100	2	8	9.12
400	650	150	2	8	9.68
450	700	200	2	8	10.25
500	750	50	3	10	10.81
550	800	100	3	10	11.37
600	850	150	3	10	11.94
650	900	200	3	10	12.51
700	950	50	4	12	13.06
750	1000	100	4	12	13.62
800	1050	150	4	12	14.18
850	1100	200	4	12	14.74
900	1150	50	5	14	15.3
950	1200	100	5	14	15.86
1000	1250	150	5	14	16.42
1050	1300	200	5	14	16.98

AC motor output			W	200	
Ballscrew / Drive				Φ15C7/QEH15SA	
Lead			mm	5	10	20
Max linear speed*			mm/sec	263	525	1050
Max RPM			RPM	3150	3150	3150
Rated thrust			N	712	356	178
Repeatability			mm	±0.02		
Effective stroke			mm	100~1050		
Rated dynamic load**	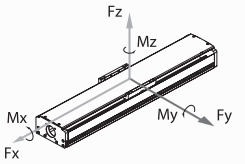	Fyd	N	1838		
		Fzd	N	2927		
		Mxd	N-m	123		
		Myd	N-m	99.5		
		Mzd	N-m	99.5		
Permitted load condition***	$\frac{Fy}{Fyd}+\frac{Fz}{Fzd}+\frac{Mx}{Mxd}+\frac{My}{Myd}+\frac{Mz}{Mzd}\leq 1$ Fy, Fz, Mx, My, Mz are working loads				

* Vibration might occur when the effective stroke is longer than 700mm.
The maximum speed should be decreased by 15% for every 100mm of increased stroke.
** The load condition is based on 10,000km operation.
*** If used on the vertical axis or in a special condition, please contact HIWIN.

3.9.13 Model Number for KA136B-FL

KA136	B	-120	C	-3000	A	FL	U	S1	M
Model	Timing Belt	Lead	Precision Grade	Effective Stroke	Load Type	Motor Flange	Cover	Limit Switch	Motor
			C: Normal		A: Standard	FL: Left	U: Without Cover None : Standard Cover	S1: Omron SX671 S2: Omron SX674 S3: Sunx GL-12F S4: Sunx GL-N12F-PX10 None: Without Sensor	M: Supplied With Motor None: Without Motor

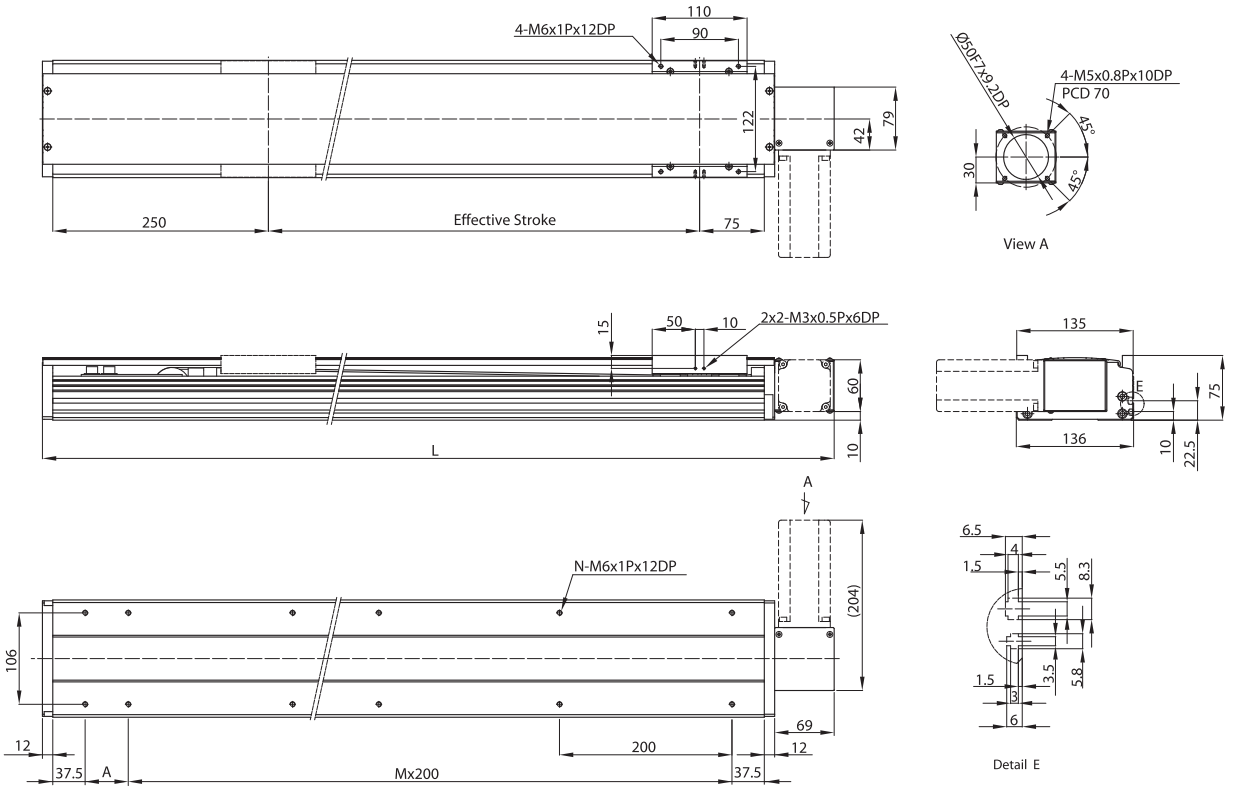

Effective stroke (mm)	L	A	M	N	Weight (kg)
200	618	50	2	8	6.97
400	818	50	3	10	8.93
600	1018	50	4	12	11.01
800	1218	50	5	14	12.97
1000	1418	50	6	16	14.93
1200	1618	50	7	18	16.99
1400	1818	50	8	20	18.95
1600	2018	50	9	22	21.01
1800	2218	50	10	24	22.97
2000	2418	50	11	26	24.93
2200	2618	50	12	28	26.99
2400	2818	50	13	30	28.95
2600	3018	50	14	32	31.01
2800	3218	50	15	34	32.97
3000	3418	50	16	36	34.93

AC motor output			W	200
Timing Belt / Drive				HTD 5M/QEH15SA
Lead			mm	120
Max linear speed			mm/sec	1800
Rated thrust			N	66
Repeatability			mm	±0.1
Effective stroke			mm	200~3000
Rated dynamic load*	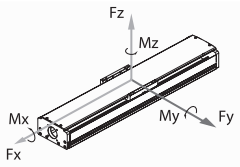	Fyd	N	1838
		Fzd	N	2927
		Mxd	N-m	123
		Myd	N-m	99.5
		Mzd	N-m	99.5
Permitted load condition**	$\frac{Fy}{Fyd}+\frac{Fz}{Fzd}+\frac{Mx}{Mxd}+\frac{My}{Myd}+\frac{Mz}{Mzd}\leq 1$ Fy, Fz, Mx, My, Mz Mz are working loads			

*The load condition is based on 10,000km operation
**For horizontal application only. If used in special condition, please contact HIWIN.

3.9.14 Model Number for KA136B-FR

KA136	B	-120	C	-3000	A	FR	U	S1	M
Model	Timing Belt	Lead	Precision Grade	Effective Stroke	Load Type	Motor Flange	Cover	Limit Switch	Motor
			C: Normal		A: Standard	FR: Right	U: Without Cover None : Standard Cover	S1: Omron SX671 S2: Omron SX674 S3: Sunx GL-12F S4: Sunx GL-N12F-PX10 None: Without Sensor	M: Supplied With Motor None: Without Motor

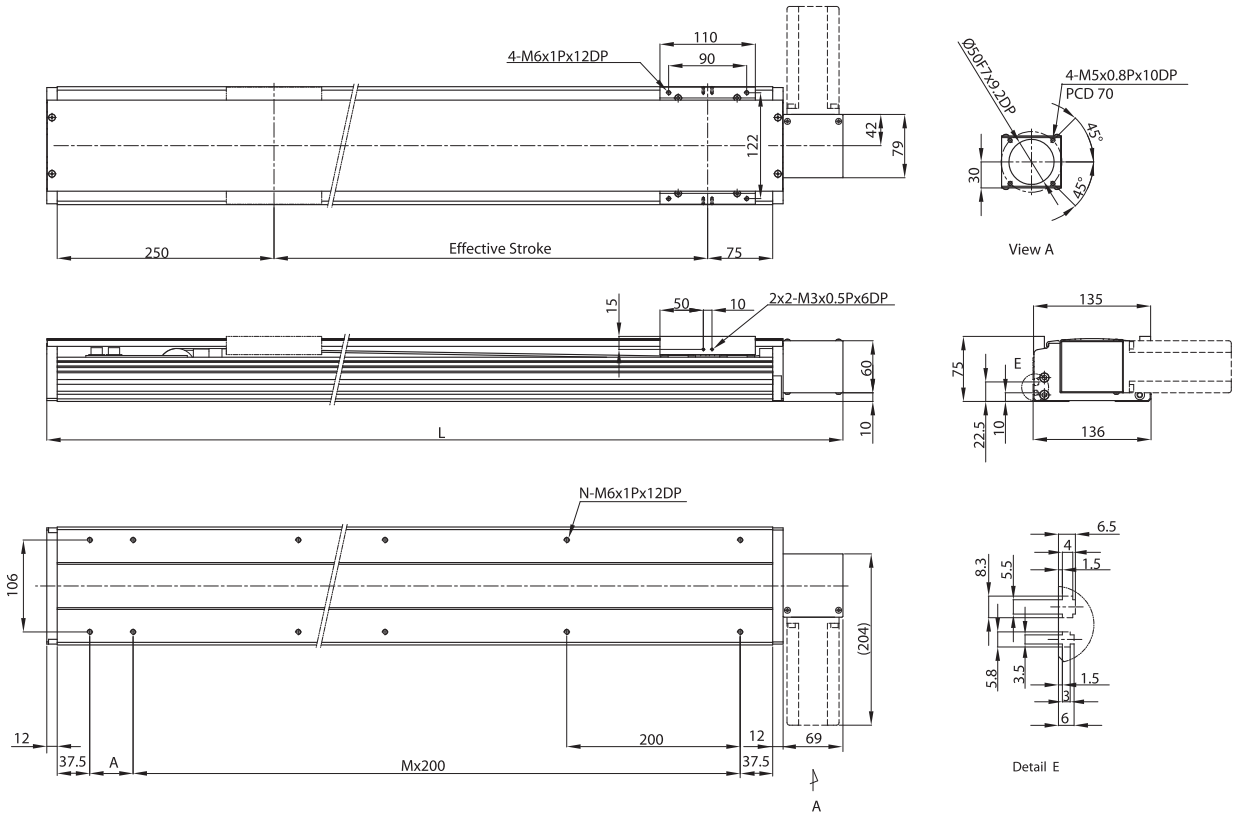

Effective stroke (mm)	L	A	M	N	Weight (kg)
200	618	50	2	8	6.97
400	818	50	3	10	8.93
600	1018	50	4	12	11.01
800	1218	50	5	14	12.97
1000	1418	50	6	16	14.93
1200	1618	50	7	18	16.99
1400	1818	50	8	20	18.95
1600	2018	50	9	22	21.01
1800	2218	50	10	24	22.97
2000	2418	50	11	26	24.93
2200	2618	50	12	28	26.99
2400	2818	50	13	30	28.95
2600	3018	50	14	32	31.01
2800	3218	50	15	34	32.97
3000	3418	50	16	36	34.93

AC motor output			W	200
Timing Belt / Drive				HTD 5M/QEH15SA
Lead			mm	120
Max linear speed			mm/sec	1800
Rated thrust			N	66
Repeatability			mm	±0.1
Effective stroke			mm	200~3000
Rated dynamic load*	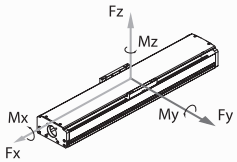	Fyd	N	1838
		Fzd	N	2927
		Mxd	N-m	123
		Myd	N-m	99.5
		Mzd	N-m	99.5
Permitted load condition**	$\frac{Fy}{Fyd}+\frac{Fz}{Fzd}+\frac{Mx}{Mxd}+\frac{My}{Myd}+\frac{Mz}{Mzd}\leq 1$ Fy, Fz, Mx, My, Mz Mz are working loads			

*The load condition is based on 10,000km operation
**For horizontal application only. If used in special condition, please contact HIWIN.

3.9.15 Model Number for KA170

KA170	-20	P	-1250	A	F0	U	S1	M	V
Model	Lead	Precision Grade	Effective Stroke	Load Type	Motor Flange	Cover	Limit Switch	Motor	Installation
	10 mm 20 mm	P: Precision C: Normal		A: Standard	F0 : Direct	U: Without Cover None : Standard Cover	S1: Omron SX671 S2: Omron SX674 S3: Sunx GL-12F S4: Sunx GL-N12F-PX10 None: Without Sensor	M: Supplied With Motor None: Without Motor	V : Vertical Install None: Horizontal Install

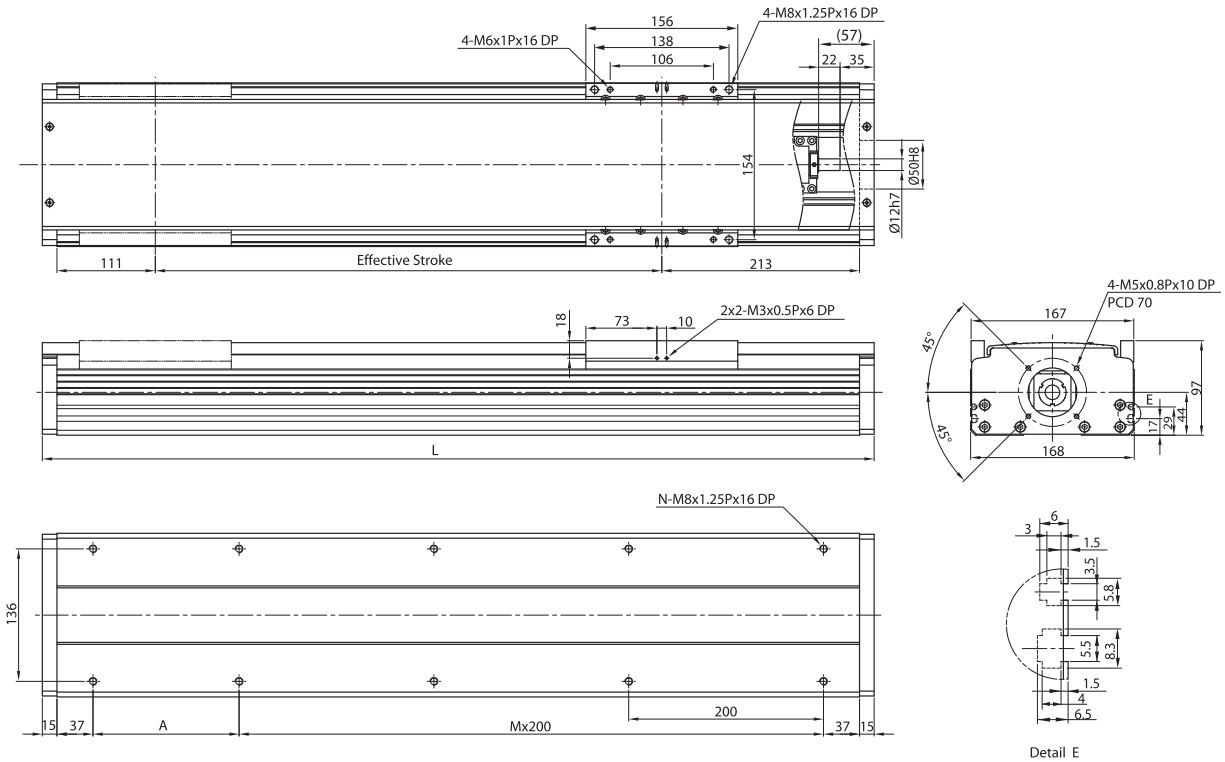

Effective stroke (mm)	L	A	M	N	Weight (kg)
150	504	200	1	6	14.57
200	554	50	2	8	15.45
250	604	100	2	8	16.33
300	654	150	2	8	17.21
350	704	200	2	8	18.09
400	754	50	3	10	18.97
450	804	100	3	10	19.85
500	854	150	3	10	20.73
550	904	200	3	10	21.61
600	954	50	4	12	22.49
650	1004	100	4	12	23.37
700	1054	150	4	12	24.25
750	1104	200	4	12	25.13
800	1154	50	5	14	26.01
850	1204	100	5	14	26.89
900	1254	150	5	14	27.77
950	1304	200	5	14	28.65
1000	1354	50	6	16	29.53
1050	1404	100	6	16	30.41
1100	1454	150	6	16	31.29
1150	1504	200	6	16	32.17
1200	1554	50	7	18	33.05
1250	1604	100	7	18	33.92

AC motor output		W	400	
Ballscrew / Drive			Φ20C7/QHH20CA	
Lead		mm	10	20
Max linear speed*		mm/sec	400	800
Max RPM		RPM	2400	2400
Rated thrust		N	936	468
Repeatability		mm	±0.02	
Effective stroke		mm	150~1250	
Rated dynamic load**	Fyd	N	4417	
	Fzd	N	7893	
	Mxd	N-m	426.3	
	Myd	N-m	309.8	
	Mzd	N-m	309.8	
Permitted load condition***	$\frac{Fy}{Fyd}+\frac{Fz}{Fzd}+\frac{Mx}{Mxd}+\frac{My}{Myd}+\frac{Mz}{Mzd}\leq 1$ Fy, Fz, Mx, My, Mz Mz are working loads			

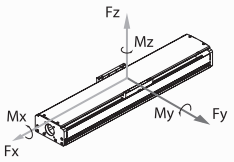

* Vibration might occur when the effective stroke is longer than 800mm.
The maximum speed should be decreased by 15% for every 100mm of increased stroke.
** The load condition is based on 10,000km operation.
*** If used on the vertical axis or in a special condition, please contact HIWIN.

3.9.16 Model Number for KA170-FD

KA170	-20	P	-1250	A	FD	U	S1	M	V
Model	Lead	Precision Grade	Effective Stroke	Load Type	Motor Flange	Cover	Limit Switch	Motor	Installation
	10 mm 20 mm	P: Precision C: Normal		A: Standard	FD: Bottom	U: Without Cover None : Standard Cover	S1: Omron SX671 S2: Omron SX674 S3: Sunx GL-12F S4: Sunx GL-N12F-PX10 None: Without Sensor	M: Supplied With Motor None: Without Motor	V : Vertical Install None: Horizontal Install

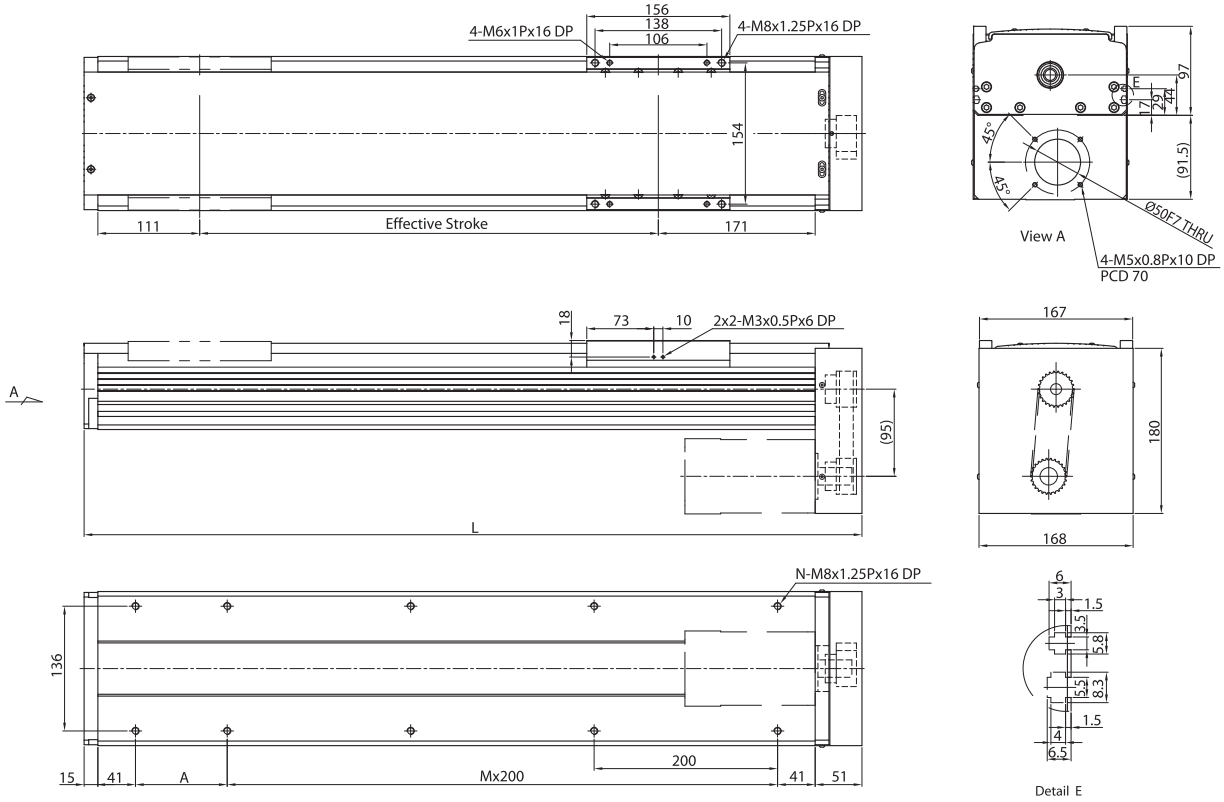

Effective stroke (mm)	L	A	M	N	Weight (kg)
150	498	150	1	6	15.01
200	548	200	1	6	15.92
250	598	50	2	8	16.82
300	648	100	2	8	17.73
350	698	150	2	8	18.63
400	748	200	2	8	19.54
450	798	50	3	10	20.45
500	848	100	3	10	21.35
550	898	150	3	10	22.26
600	948	200	3	10	23.17
650	998	50	4	12	24.07
700	1048	100	4	12	24.98
750	1098	150	4	12	25.89
800	1148	200	4	12	26.79
850	1198	50	5	14	27.71
900	1248	100	5	14	28.61
950	1298	150	5	14	29.51
1000	1348	200	5	14	30.42
1050	1398	50	6	16	31.33
1100	1448	100	6	16	32.23
1150	1498	150	6	16	33.14
1200	1548	200	6	16	34.04
1250	1598	50	7	18	34.94

AC motor output		W	400	
Ballscrew / Drive			Φ20C7/QHH20CA	
Lead		mm	10	20
Max linear speed*		mm/sec	400	800
Max RPM		RPM	2400	2400
Rated thrust		N	936	468
Repeatability		mm	±0.02	
Effective stroke		mm	150~1250	
Rated dynamic load**	Fyd	N	4417	
	Fzd	N	7893	
	Mxd	N-m	426.3	
	Myd	N-m	309.8	
	Mzd	N-m	309.8	

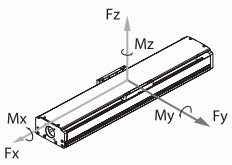

Permitted load condition*

$$\frac{Fy}{Fyd}+\frac{Fz}{Fzd}+\frac{Mx}{Mxd}+\frac{My}{Myd}+\frac{Mz}{Mzd}\leq 1$$

Fy, Fz, Mx, My, Mz Mz are working loads

* Vibration might occur when the effective stroke is longer than 800mm.
The maximum speed should be decreased by 15% for every 100mm of increased stroke.
** The load condition is based on 10,000km operation.
*** If used on the vertical axis or in a special condition, please contact HIWIN.

3.9.17 Model Number for KA170-FI

KA170	-20	P	-1250	A	FI	U	S1	M	V
Model	Lead	Precision Grade	Effective Stroke	Load Type	Motor Flange	Cover	Limit Switch	Motor	Installation
	10 mm 20 mm	P: Precision C: Normal		A: Standard	FI : Internal	U: Without Cover None : Standard Cover	S1: Omron SX671 S2: Omron SX674 S3: Sunx GL-12F S4: Sunx GL-N12F-PX10 None: Without Sensor	M: Supplied With Motor None: Without Motor	V : Vertical Install None: Horizontal Install

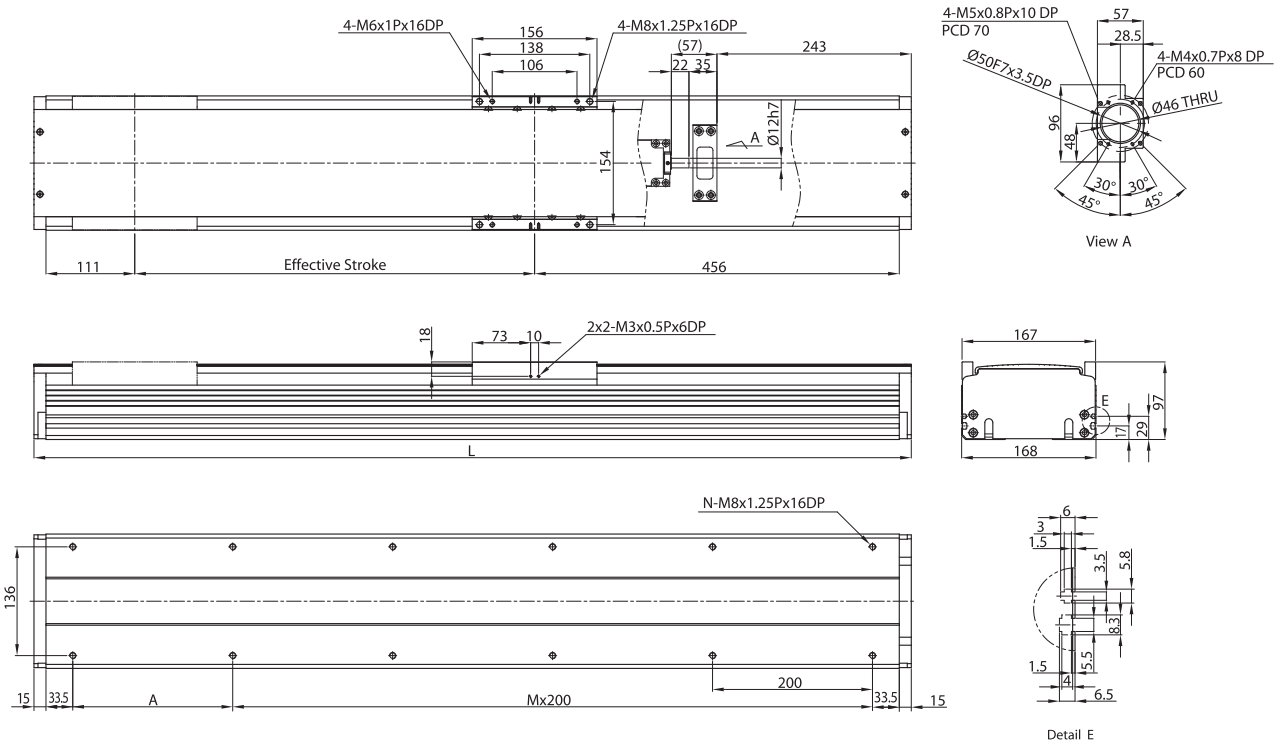

Effective stroke (mm)	L	A	M	N	Weight (kg)
150	747	50	3	10	15.59
200	797	100	3	10	16.53
250	847	150	3	10	17.47
300	897	200	3	10	18.42
350	947	50	4	12	19.36
400	997	100	4	12	20.31
450	1047	150	4	12	23.24
500	1097	200	4	12	22.18
550	1147	50	5	14	23.12
600	1197	100	5	14	24.06
650	1247	150	5	14	25.01
700	1297	200	5	14	25.95
750	1347	50	6	16	26.89
800	1397	100	6	16	27.83
850	1447	150	6	16	28.77
900	1497	200	6	16	29.71
950	1547	50	7	18	30.66
1000	1597	100	7	18	31.61
1050	1647	150	7	18	32.54
1100	1697	200	7	18	33.48
1150	1747	50	8	20	34.42
1200	1797	100	8	20	35.36
1250	1847	150	8	20	36.31

AC motor output		W	400	
Ballscrew / Drive			Φ20C7/QHH20CA	
Lead		mm	10	20
Max linear speed*		mm/sec	400	800
Max RPM		RPM	2400	2400
Rated thrust		N	936	468
Repeatability		mm	±0.02	
Effective stroke		mm	150~1250	
Rated dynamic load**	Fyd	N	4417	
	Fzd	N	7893	
	Mxd	N-m	426.3	
	Myd	N-m	309.8	
	Mzd	N-m	309.8	
Permitted load condition***	$\frac{Fy}{Fyd}+\frac{Fz}{Fzd}+\frac{Mx}{Mxd}+\frac{My}{Myd}+\frac{Mz}{Mzd}\leq 1$ Fy, Fz, Mx, My, Mz Mz are working loads			

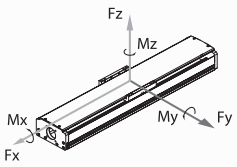

* Vibration might occur when the effective stroke is longer than 800mm.
The maximum speed should be decreased by 15% for every 100mm of increased stroke.
** The load condition is based on 10,000km operation.
*** If used on the vertical axis or in a special condition, please contact HIWIN.

3.9.18 Model Number for KA170-FL

KA170	-20	P	-1250	A	FL	U	S1	M	V
Model	Lead	Precision Grade	Effective Stroke	Load Type	Motor Flange	Cover	Limit Switch	Motor	Installation
	10 mm 20 mm	P: Precision C: Normal		A: Standard	FL: Left	U: Without Cover None : Standard Cover	S1: Omron SX671 S2: Omron SX674 S3: Sunx GL-12F S4: Sunx GL-N12F-PX10 None: Without Sensor	M: Supplied With Motor None: Without Motor	V : Vertical Install None: Horizontal Install

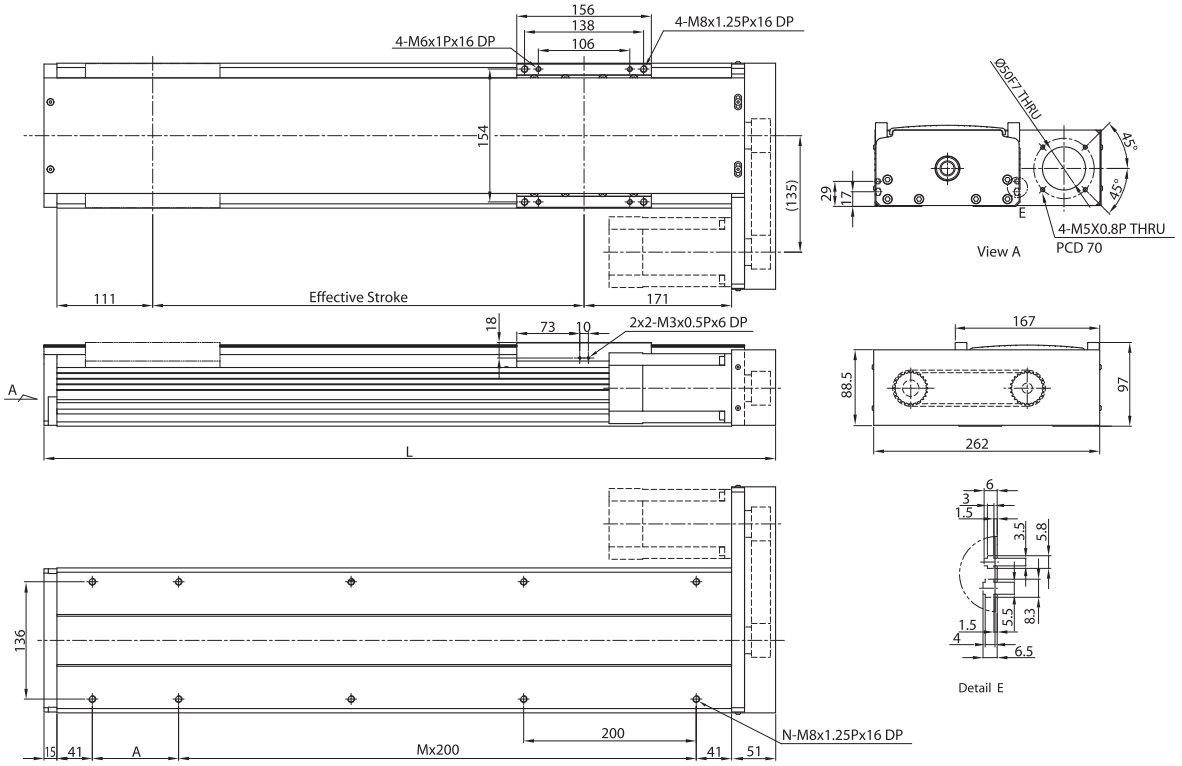

Effective stroke (mm)	L	A	M	N	Weight (kg)
150	498	150	1	6	15.01
200	548	200	1	6	15.92
250	598	50	2	8	16.82
300	648	100	2	8	17.73
350	698	150	2	8	18.63
400	748	200	2	8	19.54
450	798	50	3	10	20.45
500	848	100	3	10	21.35
550	898	150	3	10	22.26
600	948	200	3	10	23.17
650	998	50	4	12	24.07
700	1048	100	4	12	24.98
750	1098	150	4	12	25.89
800	1148	200	4	12	26.79
850	1198	50	5	14	27.71
900	1248	100	5	14	28.61
950	1298	150	5	14	29.51
1000	1348	200	5	14	30.42
1050	1398	50	6	16	31.33
1100	1448	100	6	16	32.23
1150	1498	150	6	16	33.14
1200	1548	200	6	16	34.04
1250	1598	50	7	18	34.94

AC motor output		W	400	
Ballscrew / Drive			Φ20C7/QHH20CA	
Lead		mm	10	20
Max linear speed*		mm/sec	400	800
Max RPM		RPM	2400	2400
Rated thrust		N	936	468
Repeatability		mm	±0.02	
Effective stroke		mm	150~1250	
Rated dynamic load**	Fyd	N	4417	
	Fzd	N	7893	
	Mxd	N-m	426.3	
	Myd	N-m	309.8	
	Mzd	N-m	309.8	
Permitted load condition***	$\frac{Fy}{Fyd}+\frac{Fz}{Fzd}+\frac{Mx}{Mxd}+\frac{My}{Myd}+\frac{Mz}{Mzd}\leq 1$ Fy, Fz, Mx, My, Mz Mz are working loads			

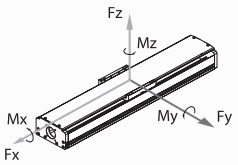

* Vibration might occur when the effective stroke is longer than 800mm.
The maximum speed should be decreased by 15% for every 100mm of increased stroke.
** The load condition is based on 10,000km operation.
*** If used on the vertical axis or in a special condition, please contact HIWIN.

3.9.19 Model Number for KA170-FR

KA170	-20	P	-1250	A	FR	U	S1	M	V
Model	Lead	Precision Grade	Effective Stroke	Load Type	Motor Flange	Cover	Limit Switch	Motor	Installation
	10 mm 20 mm	P: Precision C: Normal		A: Standard	FR: Right	U: Without Cover None : Standard Cover	S1: Omron SX671 S2: Omron SX674 S3: Sunx GL-12F S4: Sunx GL-N12F-PX10 None: Without Sensor	M: Supplied With Motor None: Without Motor	V : Vertical Install None: Horizontal Install

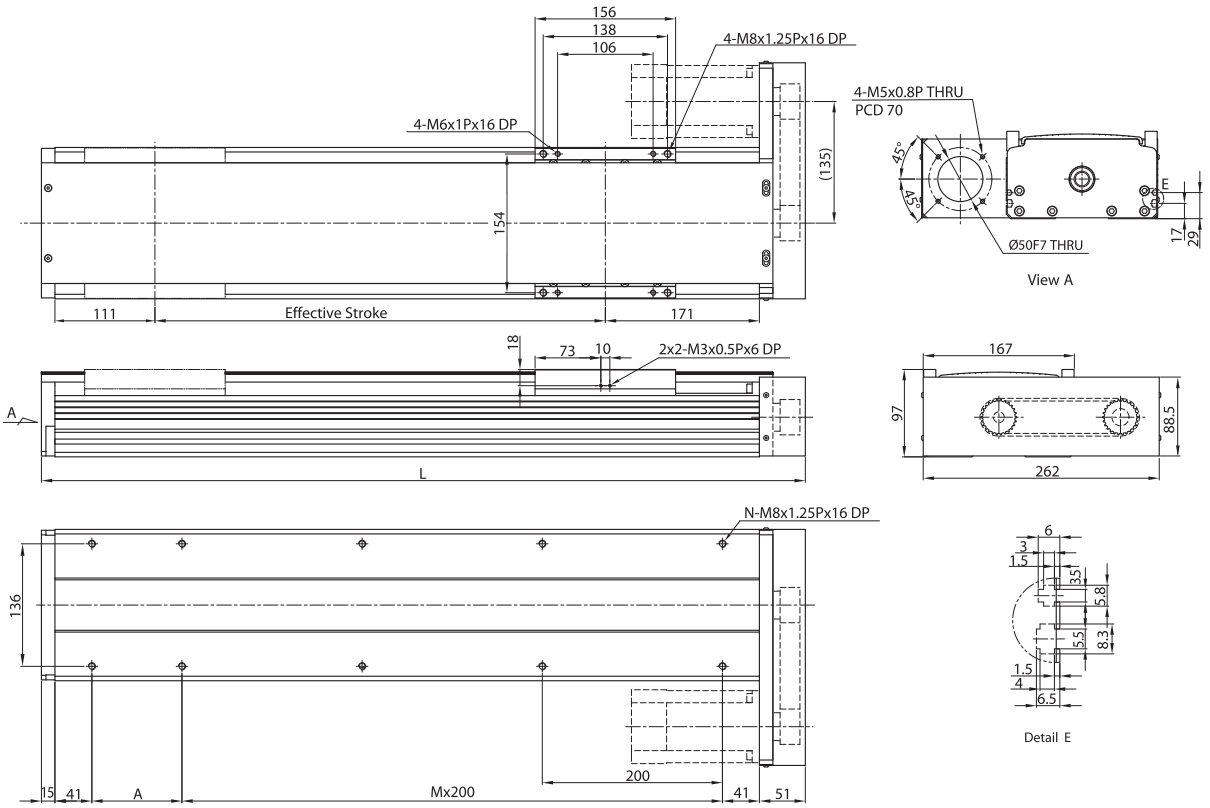

Effective stroke (mm)	L	A	M	N	Weight (kg)
150	498	150	1	6	15.01
200	548	200	1	6	15.92
250	598	50	2	8	16.82
300	648	100	2	8	17.73
350	698	150	2	8	18.63
400	748	200	2	8	19.54
450	798	50	3	10	20.45
500	848	100	3	10	21.35
550	898	150	3	10	22.26
600	948	200	3	10	23.17
650	998	50	4	12	24.07
700	1048	100	4	12	24.98
750	1098	150	4	12	25.89
800	1148	200	4	12	26.79
850	1198	50	5	14	27.71
900	1248	100	5	14	28.61
950	1298	150	5	14	29.51
1000	1348	200	5	14	30.42
1050	1398	50	6	16	31.33
1100	1448	100	6	16	32.23
1150	1498	150	6	16	33.14
1200	1548	200	6	16	34.04
1250	1598	50	7	18	34.94

AC motor output		W	400	
Ballscrew / Drive			Φ20C7/QHH20CA	
Lead		mm	10	20
Max linear speed*		mm/sec	400	800
Max RPM		RPM	2400	2400
Rated thrust		N	936	468
Repeatability		mm	±0.02	
Effective stroke		mm	150~1250	
Rated dynamic load**	Fyd	N	4417	
	Fzd	N	7893	
	Mxd	N-m	426.3	
	Myd	N-m	309.8	
	Mzd	N-m	309.8	
Permitted load condition***	$\frac{Fy}{Fyd}+\frac{Fz}{Fzd}+\frac{Mx}{Mxd}+\frac{My}{Myd}+\frac{Mz}{Mzd}\leq 1$ Fy, Fz, Mx, My, Mz Mz are working loads			

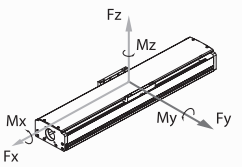

* Vibration might occur when the effective stroke is longer than 800mm.
The maximum speed should be decreased by 15% for every 100mm of increased stroke.
** The load condition is based on 10,000km operation.
*** If used on the vertical axis or in a special condition, please contact HIWIN.

3.9.20 Model Number for KA170B-FL

KA170	B	-120	C	-3000	A	FL	U	S1	M
Model	Timing Belt	Lead	Precision Grade	Effective Stroke	Load Type	Motor Flange	Cover	Limit Switch	Motor
			C: Normal		A: Standard	FL: Left	U: Without Cover None : Standard Cover	S1: Omron SX671 S2: Omron SX674 S3: Sunx GL-12F S4: Sunx GL-N12F-PX10 None: Without Sensor	M: Supplied With Motor None: Without Motor

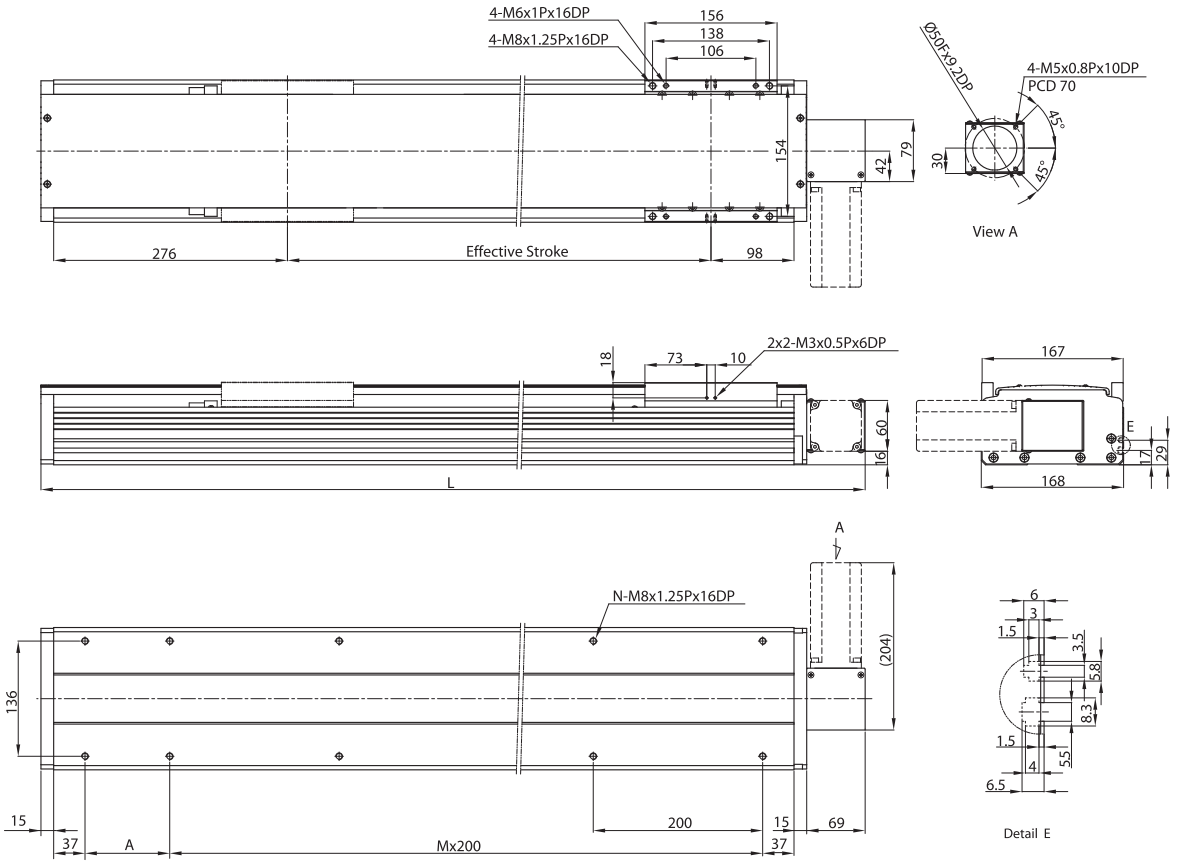

Effective stroke (mm)	L	A	M	N	Weight (kg)
200	673	100	2	8	14.74
400	873	100	3	10	17.88
600	1073	100	4	12	21.13
800	1273	100	5	14	24.37
1000	1473	100	6	16	27.52
1200	1673	100	7	18	30.77
1400	1873	100	8	20	34.01
1600	2073	100	9	22	37.07
1800	2273	100	10	24	40.3
2000	2473	100	11	26	43.54
2200	2673	100	12	28	46.68
2400	2873	100	13	30	49.92
2600	3073	100	14	32	53.07
2800	3273	100	15	34	56.2
3000	3473	100	16	36	59.44

AC motor output		W	400
Timing Belt / Drive			HTD 5M/QHH20CA
Lead		mm	120
Max linear speed		mm/sec	1800
Rated thrust		N	133
Repeatability		mm	±0.1
Effective stroke		mm	200~3000
Rated dynamic load*	Fyd	N	4417
	Fzd	N	7893
	Mxd	N-m	426.2
	Myd	N-m	309.8
	Mzd	N-m	309.8
Permitted load condition**	$\frac{Fy}{Fyd}+\frac{Fz}{Fzd}+\frac{Mx}{Mxd}+\frac{My}{Myd}+\frac{Mz}{Mzd}\leq 1$ Fy, Fz, Mx, My, Mz Mz are working loads		

*The load condition is based on 10,000km operation
**For horizontal application only. If used in special condition, please contact HIWIN.

3.9.21 Model Number for KA170B-FR

KA170	B	-120	C	-3000	A	FR	U	S1	M
Model	Timing Belt	Lead	Precision Grade	Effective Stroke	Load Type	Motor Flange	Cover	Limit Switch	Motor
			C: Normal		A: Standard	FR: Right	U: Without Cover None : Standard Cover	S1: Omron SX671 S2: Omron SX674 S3: Sunx GL-12F S4: Sunx GL-N12F-PX10 None: Without Sensor	M: Supplied With Motor None: Without Motor

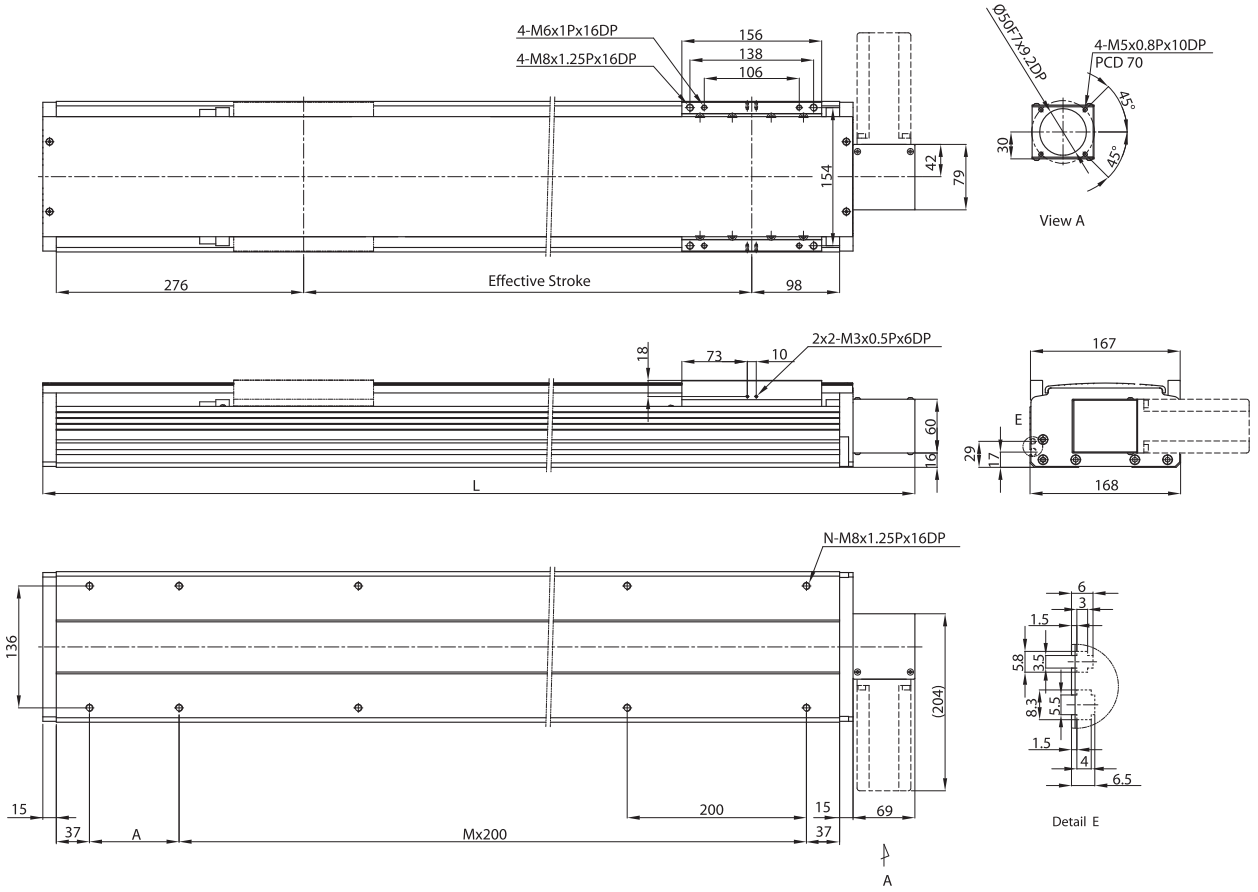

Effective stroke (mm)	L	A	M	N	Weight (kg)
200	673	100	2	8	14.74
400	873	100	3	10	17.88
600	1073	100	4	12	21.13
800	1273	100	5	14	24.37
1000	1473	100	6	16	27.52
1200	1673	100	7	18	30.77
1400	1873	100	8	20	34.01
1600	2073	100	9	22	37.07
1800	2273	100	10	24	40.3
2000	2473	100	11	26	43.54
2200	2673	100	12	28	46.68
2400	2873	100	13	30	49.92
2600	3073	100	14	32	53.07
2800	3273	100	15	34	56.2
3000	3473	100	16	36	59.44

AC motor output			W	400
Timing Belt / Drive				HTD 5M/QHH20CA
Lead			mm	120
Max linear speed			mm/sec	1800
Rated thrust			N	133
Repeatability			mm	±0.1
Effective stroke			mm	200~3000
Rated dynamic load*	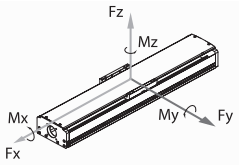	Fyd	N	4417
		Fzd	N	7893
		Mxd	N-m	426.2
		Myd	N-m	309.8
		Mzd	N-m	309.8
Permitted load condition**	$\frac{Fy}{Fyd}+\frac{Fz}{Fzd}+\frac{Mx}{Mxd}+\frac{My}{Myd}+\frac{Mz}{Mzd}\leq 1$ Fy, Fz, Mx, My, Mz Mz are working loads			

*The load condition is based on 10,000km operation
**For horizontal application only. If used in special condition, please contact HIWIN.

3.9.22 Model Number for KA200

KA200	-25	P	-1250	A	F0	U	S1	M	V
Model	Lead	Precision Grade	Effective Stroke	Load Type	Motor Flange	Cover	Limit Switch	Motor	Installation
	10mm 20mm	P: Precision C: Normal		A: Standard	F0 : Direct	U: Without Cover None : Standard Cover	S1: Omron SX671 S2: Omron SX674 S3: Sunx GL-12F S4: Sunx GL-N12F-PX10 None: Without Sensor	M: Supplied With Motor None: Without Motor	V : Vertical Install None: Horizontal Install

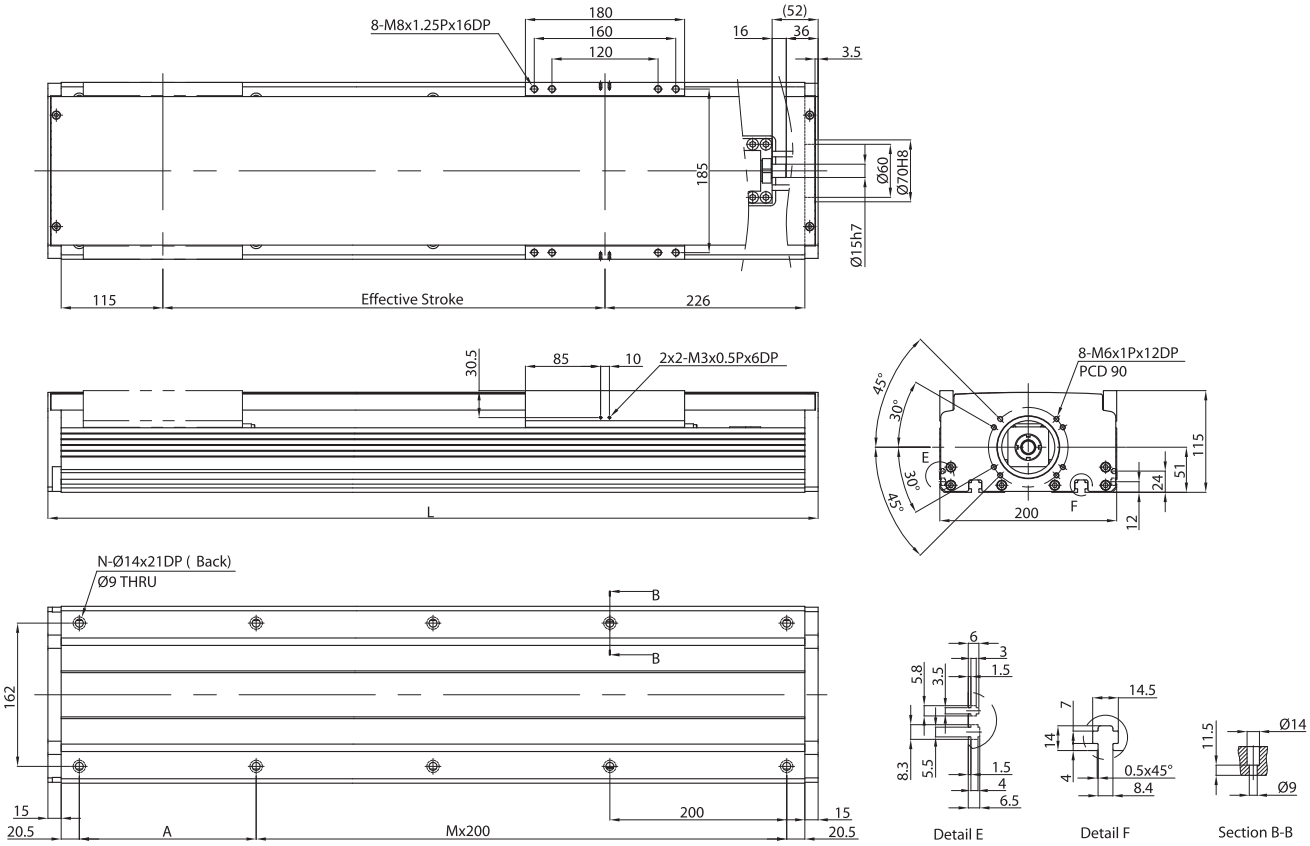

Effective stroke (mm)	L	A	M	N	Weight (kg)
150	521	50	2	8	17.66
200	571	100	2	8	18.99
250	621	150	2	8	20.32
300	671	200	2	8	21.65
350	721	50	3	10	22.98
400	771	100	3	10	24.31
450	821	150	3	10	25.64
500	871	200	3	10	26.97
550	921	50	4	12	28.3
600	971	100	4	12	29.63
650	1021	150	4	12	30.96
700	1071	200	4	12	32.29
750	1121	50	5	14	33.62
800	1171	100	5	14	34.95
850	1221	150	5	14	36.28
900	1271	200	5	14	37.61
950	1321	50	6	16	38.94
1000	1371	100	6	16	40.27
1050	1421	150	6	16	41.61
1100	1471	200	6	16	42.93
1150	1521	50	7	18	44.26
1200	1571	100	7	18	45.59
1250	1621	150	7	18	46.92

AC motor output		W	750	
Ballscrew / Drive			Φ25C7/QHH25CA	
Lead		mm	10	25
Max linear speed		mm/sec	525	1313
Max RPM		RPM	3150	3 150
Rated thrust		N	1181	472
Repeatability		mm	±0.02	
Effective stroke		mm	150~1250	
Rated dynamic load*	Fyd	N	3926	
	Fzd	N	8587	
	Mxd	N-m	515.2	
	Myd	N-m	373.6	
	Mzd	N-m	373.6	
Permitted load condition**	$\frac{Fy}{Fyd}+\frac{Fz}{Fzd}+\frac{Mx}{Mxd}+\frac{My}{Myd}+\frac{Mz}{Mzd}\leq 1$ Fy, Fz, Mx, My, Mz Mz are working loads			

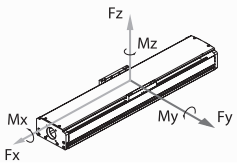

*The load condition is based on 10,000km operation
**For horizontal application only. If used in special condition, please contact HIWIN.

3.9.23 Model Number for KA200-FD

KA200	-25	P	-1250	A	FD	U	S1	M	V
Model	Lead	Precision Grade	Effective Stroke	Load Type	Motor Flange	Cover	Limit Switch	Motor	Installation
	10mm 25mm	P: Precision C: Normal		A: Standard	FD: Bottom	U: Without Cover None : Standard Cover	S1: Omron SX671 S2: Omron SX674 S3: Sunx GL-12F S4: Sunx GL-N12F-PX10 None: Without Sensor	M: Supplied With Motor None: Without Motor	M: Supplied With Motor None: Without Motor

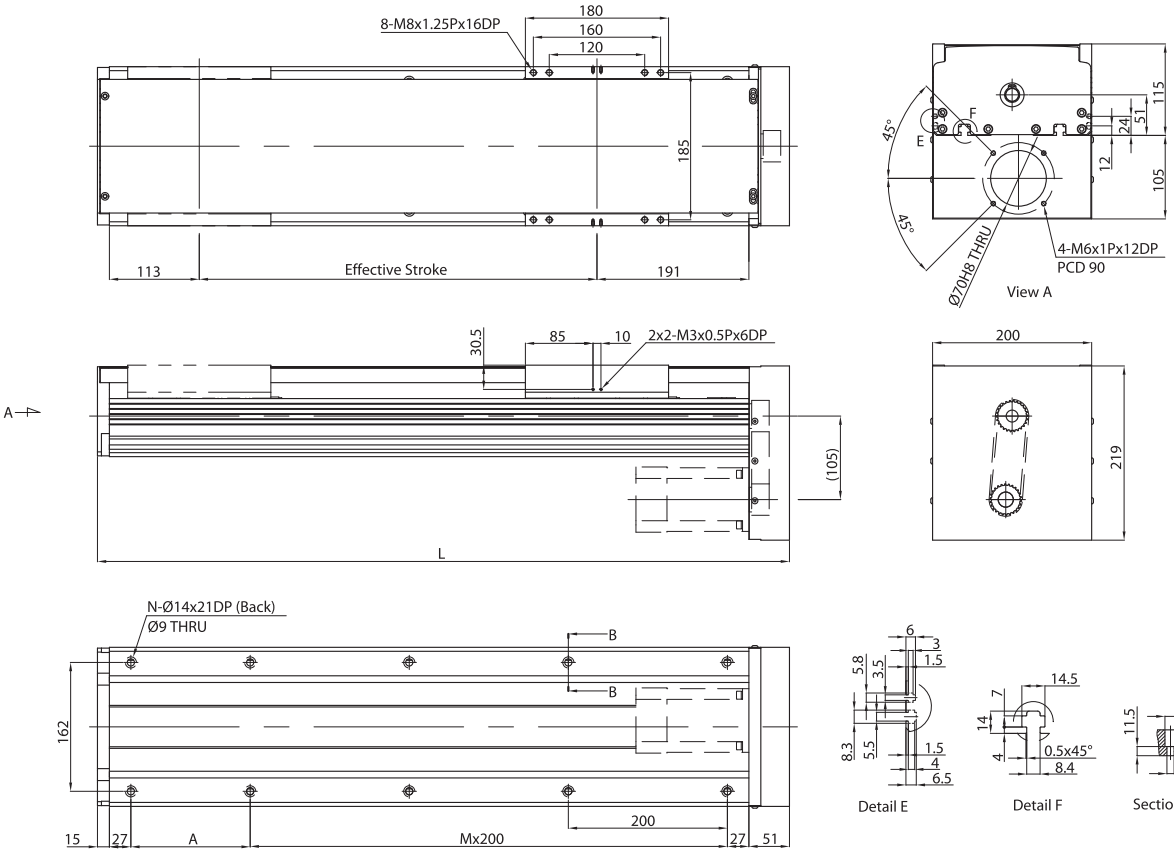

Effective stroke (mm)	L	A	M	N	Weight (kg)
150	520	200	1	6	18.46
200	570	50	2	8	19.79
250	620	100	2	8	21.12
300	670	150	2	8	22.45
350	720	200	2	8	23.78
400	770	50	3	10	25.11
450	820	100	3	10	26.44
500	870	150	3	10	27.77
550	920	200	3	10	29.1
600	970	50	4	12	30.43
650	1020	100	4	12	31.76
700	1070	150	4	12	33.09
750	1120	200	4	12	34.42
800	1170	50	5	14	35.75
850	1220	100	5	14	37.08
900	1270	150	5	14	38.41
950	1320	200	5	14	39.74
1000	1370	50	6	16	41.07
1050	1420	100	6	16	42.41
1100	1470	150	6	16	43.73
1150	1520	200	6	16	45.06
1200	1570	50	7	18	46.39
1250	1620	100	7	18	47.72

AC motor output		W	750	
Ballscrew / Drive			Φ25C7/QHH25CA	
Lead		mm	10	25
Max linear speed		mm/sec	525	1313
Max RPM		RPM	3150	3150
Rated thrust		N	1181	472
Repeatability		mm	±0.02	
Effective stroke		mm	150~1250	
Rated dynamic load*	Fyd	N	3926	
	Fzd	N	8587	
	Mxd	N-m	515.2	
	Myd	N-m	373.6	
	Mzd	N-m	373.6	
Permitted load condition**	$\frac{Fy}{Fyd}+\frac{Fz}{Fzd}+\frac{Mx}{Mxd}+\frac{My}{Myd}+\frac{Mz}{Mzd}\leq 1$ Fy, Fz, Mx, My, Mz Mz are working loads			

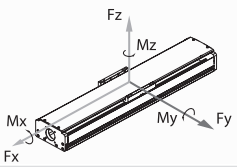

*The load condition is based on 10,000km operation
**For horizontal application only. If used in special condition, please contact HIWIN.

3.9.24 Model Number for KA200-FI

KA200	-25	P	-1250	A	FI	U	S1	M	V
Model	Lead	Precision Grade	Effective Stroke	Load Type	Motor Flange	Cover	Limit Switch	Motor	Installation
	10mm 25mm	P: Precision C: Normal		A: Standard	FI: Internal	U: Without Cover None : Standard Cover	S1: Omron SX671 S2: Omron SX674 S3: Sunx GL-12F S4: Sunx GL-N12F-PX10 None: Without Sensor	M: Supplied With Motor None: Without Motor	V : Vertical Install None: Horizontal Install

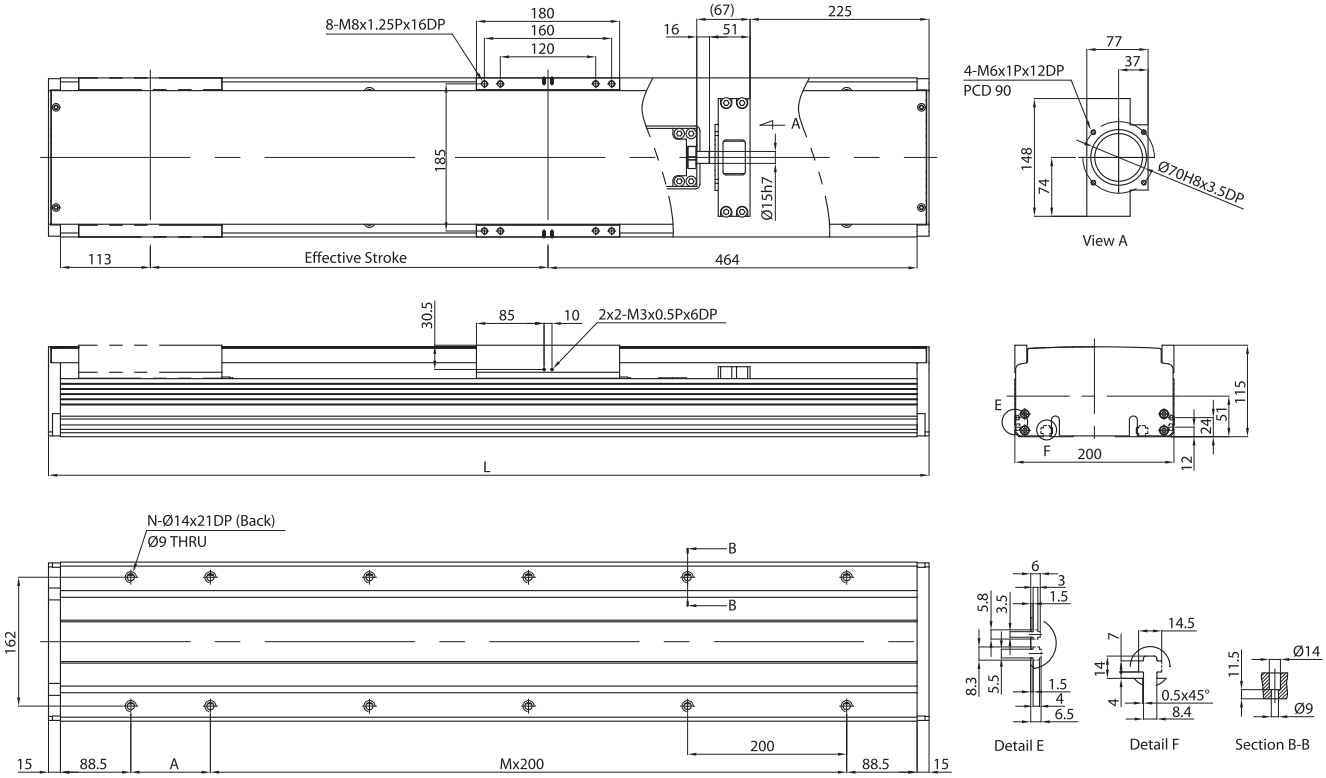

Effective stroke (mm)	L	A	M	N	Weight (kg)
150	757	150	2	8	19.83
200	807	200	2	8	21.32
250	857	50	3	10	22.82
300	907	100	3	10	24.31
350	957	150	3	10	25.81
400	1007	200	3	10	27.3
450	1057	50	4	12	28.79
500	1107	100	4	12	30.29
550	1157	150	4	12	31.78
600	1207	200	4	12	33.27
650	1257	50	5	14	34.77
700	1307	100	5	14	36.26
750	1357	150	5	14	37.76
800	1407	200	5	14	39.25
850	1457	50	6	16	40.74
900	1507	100	6	16	42.24
950	1557	150	6	16	43.73
1000	1607	200	6	16	45.22
1050	1657	50	7	18	46.73
1100	1707	100	7	18	48.21
1150	1757	150	7	18	49.7
1200	1807	200	7	18	51.2
1250	1857	50	8	19	52.69

AC motor output		W	750	
Ballscrew / Drive			Φ25C7/QHH25CA	
Lead		mm	10	25
Max linear speed		mm/sec	525	1313
Max RPM		RPM	3150	3150
Rated thrust		N	1181	472
Repeatability		mm	±0.02	
Effective stroke		mm	150~1250	
Rated dynamic load*	Fyd	N	3926	
	Fzd	N	8587	
	Mxd	N-m	515.2	
	Myd	N-m	373.6	
	Mzd	N-m	373.6	
Permitted load condition**	$\frac{Fy}{Fyd}+\frac{Fz}{Fzd}+\frac{Mx}{Mxd}+\frac{My}{Myd}+\frac{Mz}{Mzd}\leq 1$ Fy, Fz, Mx, My, Mz Mz are working loads			

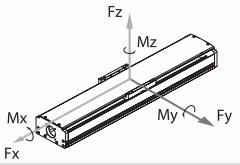

*The load condition is based on 10,000km operation
**For horizontal application only. If used in special condition, please contact HIWIN.

3.9.25 Model Number for KA200-FL

KA200	-25	P	-1250	A	FL	U	S1	M	V
Model	Lead	Precision Grade	Effective Stroke	Load Type	Motor Flange	Cover	Limit Switch	Motor	Installation
	10mm 25mm	P: Precision C: Normal		A: Standard	FL: Left	U: Without Cover None : Standard Cover	S1: Omron SX671 S2: Omron SX674 S3: Sunx GL-12F S4: Sunx GL-N12F-PX10 None: Without Sensor	M: Supplied With Motor None: Without Motor	V : Vertical Install None: Horizontal Install

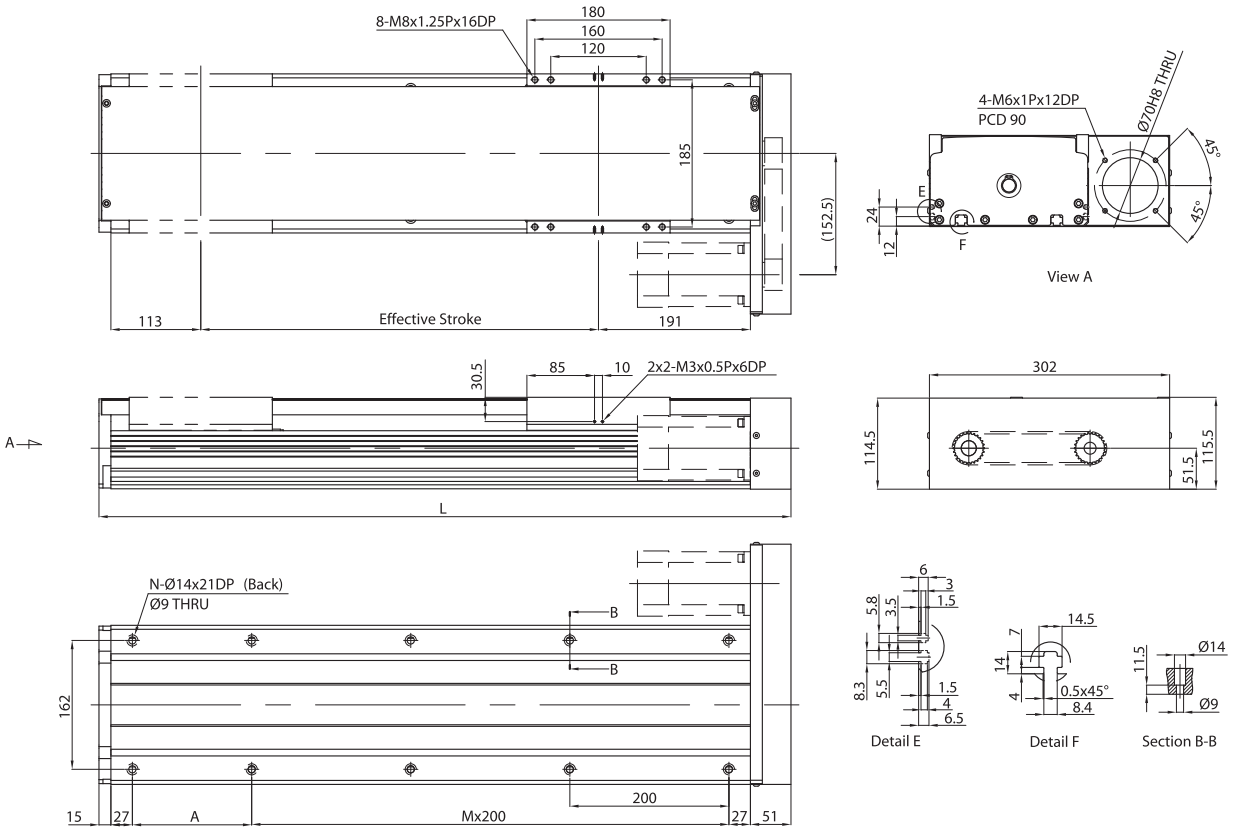

Effective stroke (mm)	L	A	M	N	Weight (kg)
150	520	200	1	6	18.46
200	570	50	2	8	19.79
250	620	100	2	8	21.12
300	670	150	2	8	22.45
350	720	200	2	8	23.78
400	770	50	3	10	25.11
450	820	100	3	10	26.44
500	870	150	3	10	27.77
550	920	200	3	10	29.1
600	970	50	4	12	30.43
650	1020	100	4	12	31.76
700	1070	150	4	12	33.09
750	1120	200	4	12	34.42
800	1170	50	5	14	35.75
850	1220	100	5	14	37.08
900	1270	150	5	14	38.41
950	1320	200	5	14	39.74
1000	1370	50	6	16	41.07
1050	1420	100	6	16	42.41
1100	1470	150	6	16	43.73
1150	1520	200	6	16	45.06
1200	1570	50	7	18	46.39
1250	1620	100	7	18	47.72

AC motor output		W	750	
Ballscrew / Drive			Φ25C7/QHH20CA	
Lead		mm	10	25
Max linear speed		mm/sec	525	1313
Max RPM		RPM	3150	3150
Rated thrust		N	1181	472
Repeatability		mm	±0.02	
Effective stroke		mm	150~1250	
Rated dynamic load*	Fyd	N	3926	
	Fzd	N	8587	
	Mxd	N-m	515.2	
	Myd	N-m	373.6	
	Mzd	N-m	373.6	
Permitted load condition**	$\frac{Fy}{Fyd}+\frac{Fz}{Fzd}+\frac{Mx}{Mxd}+\frac{My}{Myd}+\frac{Mz}{Mzd}\leq 1$ Fy, Fz, Mx, My, Mz Mz are working loads			

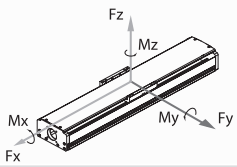

*The load condition is based on 10,000km operation
**For horizontal application only. If used in special condition, please contact HIWIN.

3.9.26 Model Number for KA200-FR

KA200	-25	P	-1250	A	FR	U	S1	M	V
Model	Lead	Precision Grade	Effective Stroke	Load Type	Motor Flange	Cover	Limit Switch	Motor	Installation
	10mm 25mm	P: Precision C: Normal		A: Standard	FR: Right	U: Without Cover None : Standard Cover	S1: Omron SX671 S2: Omron SX674 S3: Sunx GL-12F S4: Sunx GL-N12F-PX10 None: Without Sensor	M: Supplied With Motor None: Without Motor	V : Vertical Install None: Horizontal Install

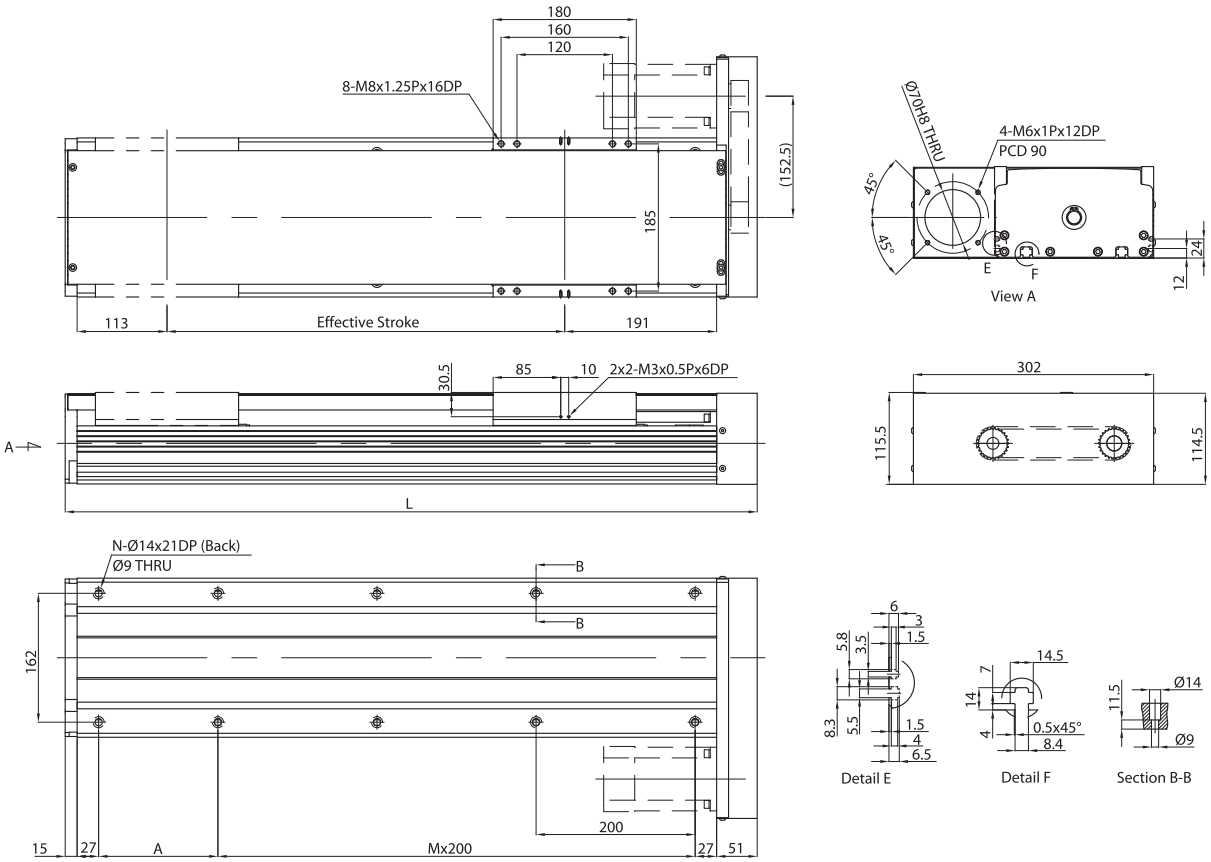

Effective stroke (mm)	L	A	M	N	Weight (kg)
150	520	200	1	6	18.46
200	570	50	2	8	19.79
250	620	100	2	8	21.12
300	670	150	2	8	22.45
350	720	200	2	8	23.78
400	770	50	3	10	25.11
450	820	100	3	10	26.44
500	870	150	3	10	27.77
550	920	200	3	10	29.1
600	970	50	4	12	30.43
650	1020	100	4	12	31.76
700	1070	150	4	12	33.09
750	1120	200	4	12	34.42
800	1170	50	5	14	35.75
850	1220	100	5	14	37.08
900	1270	150	5	14	38.41
950	1320	200	5	14	39.74
1000	1370	50	6	16	41.07
1050	1420	100	6	16	42.41
1100	1470	150	6	16	43.73
1150	1520	200	6	16	45.06
1200	1570	50	7	18	46.39
1250	1620	100	7	18	47.72

AC motor output		W	750	
Ballscrew / Drive			Φ 25C7/QHH20CA	
Lead		mm	10	25
Max linear speed		mm/sec	525	1313
Max RPM		RPM	3150	3150
Rated thrust		N	1181	472
Repeatability		mm	±0.02	
Effective stroke		mm	150~1250	
Rated dynamic load*	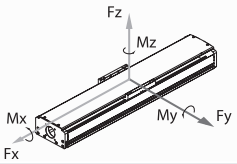	Fyd	N	3926
		Fzd	N	8587
		Mxd	N-m	515.2
		Myd	N-m	373.6
		Mzd	N-m	373.6
Permitted load condition**	$\frac{Fy}{Fyd}+\frac{Fz}{Fzd}+\frac{Mx}{Mxd}+\frac{My}{Myd}+\frac{Mz}{Mzd}\leq 1$ Fy, Fz, Mx, My, Mz Mz are working loads			

*The load condition is based on 10,000km operation
**For horizontal application only. If used in special condition, please contact HIWIN.