A11DHKA1 | Released by HIWIN design group.

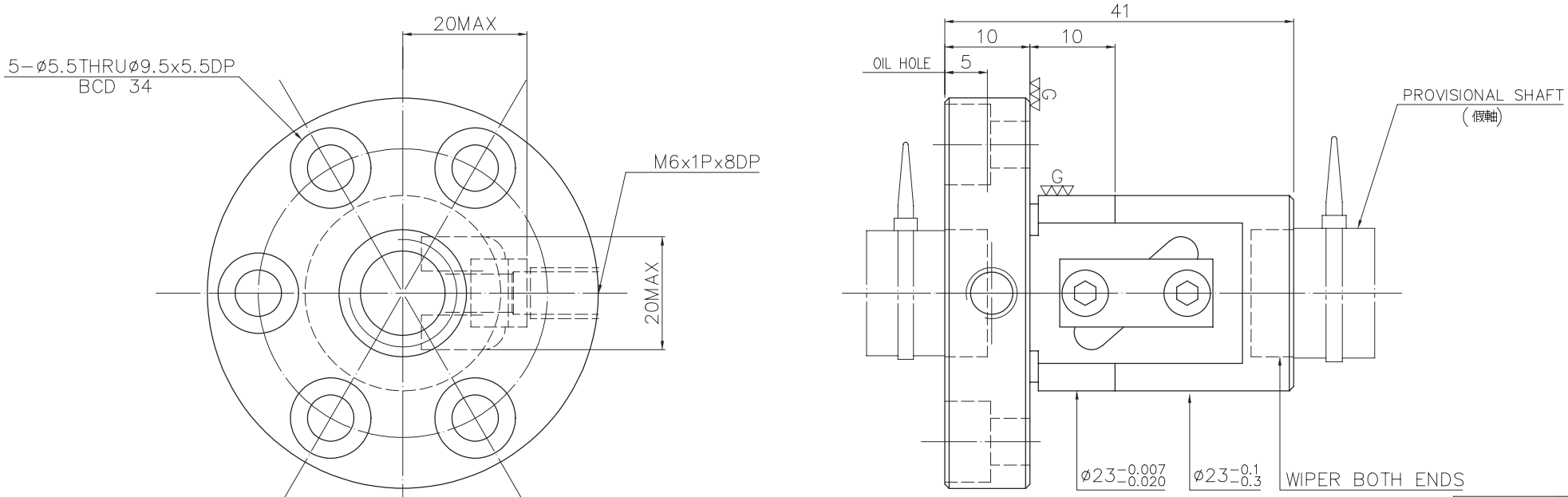


| | |
|---|---|
| PRELOAD(kgf) | — |
| R.D. | — |
| S.F. (kgf) | |
| DRAG TORQUE(kgf-cm) | |
| DIRECTION OF TURN | R |
| P.C. DIA. | 10.2 |
| BALL DIA. | 2.381 |
| BACKLASH | 0.02MAX |
| CIRCUIT | 2.5*1 |
| LEAD ANGLE | 7.12 |
| DYNAMIC (kgf) | 304 |
| STATIC (kgf) | 466 |
| LEAD | 4 |

SPEC: R10-4B1-FSV

| | | | |
|---|---|---|---|
| MAX. AXIAL LOAD(kgf) | | LUBRICATION | |
| MAX. ROTATIONAL SPEED (rpm) | | SPACE BALL | |
| DN VALUE | | E1 TYPE ASSEMBLY METHOD | |
| MAX. FEED RATE(m/min) | | CUSTOMER DRAWING NO. | |
| ACCELERATION(m/sec²) | | CUSTOMER MC TYPE | |
| SUPPORT METHOD | | CUSTOMER AXIAL TYPE | |
| | | | |

THREAD LENGTH

+ 0 −

Tp, +ep, −ep

V300p: ~

ep: ~

UNCHAMFERED USE ■R0.5 □R1 □R

| ROUGH M/C | FIN M/C | GRD |
|---|---|---|
| 25a | 6.3a | 0.4a |

SCALE 1:X

NORMAL TOLERANCE mm

| UP TO 6 | 6 30 | 30 120 | 120 300 | 300 600 | 600 1200 | 1200 2400 | OVER 2400 |
|---|---|---|---|---|---|---|---|
| ±0.1 | ±0.2 | ±0.3 | ±0.4 | ±0.5 | ±0.8 | ±1.0 | ±1.5 |

HIWIN® BALLSCREWS

| | | | |
|---|---|---|---|
| MAT. | SH: ROLLED | DATE | 2008.11.11 |
| | NT: SNCM220/Equivalent | DWG | Chunlin |
| THREAD BALL TRACK HRC 56 ~ 62 | | APPD | Michelle |
| | | PROCESS NO. | G |
| CUSTR | LETROMEC(M) | | |
| DWG.NO. | A11DHKA1 | | |

*BREAK SHARP EDGE UNLESS OTHER SPECIFIED.
*未畫倒角者以R0.5MAX

THREAD END ALLOWS ABOVE LENGTH OUT OF HARDNESS TOLERANCE

| DATE | MODIFICATION | APPROVED |
|---|---|---|
| | | |
| | | |

* PLEASE IGNORE CHINESE CHARACTERS WHICH ARE FOR OUR REFERENCE ONLY.

A11THWA1 | Released by HIWIN design group.

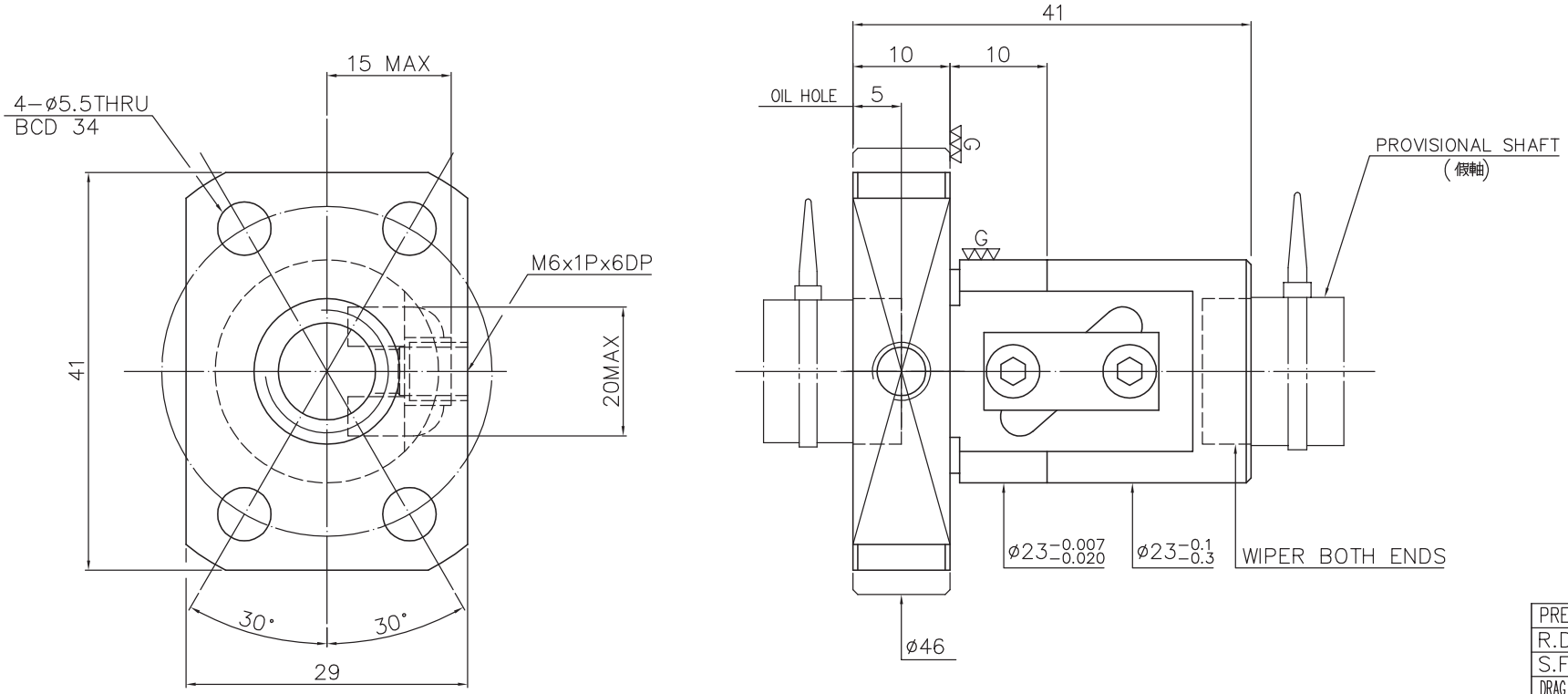


SPEC: R10-4B1-FSV

| | | | | | |
|---|---|---|---|---|---|
| MAX. AXIAL LOAD (kgf) | | LUBRICATION | | PRELOAD (kgf) | — |
| MAX. ROTATIONAL SPEED (rpm) | | SPACE BALL | | R.D. | — |
| DN VALUE | | E1 TYPE ASSEMBLY METHOD | | S.F. (kgf) | |
| MAX. FEED RATE (m/min) | | CUSTOMER DRAWING NO. | | DRAG TORQUE (kgf-cm) | |
| ACCELERATION (m/sec²) | | CUSTOMER MC TYPE | | DIRECTION OF TURN | R |
| SUPPORT METHOD | | CUSTOMER AXIAL TYPE | | P.C. DIA. | 10.2 |
| | | | | BALL DIA. | 2.381 |
| | | | | BACKLASH | 0.02MAX |
| | | | | CIRCUIT | 2.5*1 |
| | | | | LEAD ANGLE | 7.12 |
| | | | | DYNAMIC (kgf) | 304 |
| | | | | STATIC (kgf) | 466 |
| | | | | LEAD | 4 |

THREAD LENGTH

+ 0 −

Tp, Hep, ep

V300p: ~

ep: ~

UNCHAMFERED USE ■C0.5 □C1 □C

| ROUGH M/C | FIN M/C | GRD |
|---|---|---|
| 25a | 6.3a | 0.4a |

SCALE 1:X

NORMAL TOLERANCE mm

| UP TO 6 | 6 30 | 30 120 | 120 300 | 300 600 | 600 1200 | 1200 2400 | OVER 2400 |
|---|---|---|---|---|---|---|---|
| ±0.1 | ±0.2 | ±0.3 | ±0.4 | ±0.5 | ±0.8 | ±1.0 | ±1.5 |

HIWIN® BALLSCREWS

| | | | |
|---|---|---|---|
| MAT. | SH: ROLLED | DATE | 2010.08.30 |
| | NT: SNCM220/Equivalent | DWG | Joy |
| THREAD BALL TRACK HRC 56 ~ 62 | | APPD | Lady |
| | | PROCESS NO. | G |
| CUSTR | LETROMEC(M) | | |
| DWG.NO. | A11THWA1 | | |

*BREAK SHARP EDGE UNLESS OTHER SPECIFIED.
*未畫倒角者去毛邊 (C0.2MAX)

THREAD END ALLOWS ABOVE LENGTH OUT OF HARDNESS TOLERANCE

| DATE | MODIFICATION | APPROVED |
|---|---|---|
| | | |
| | | |

* PLEASE IGNORE CHINESE CHARACTERS WHICH ARE FOR OUR REFERENCE ONLY.

A10XFCA1 | Released by HIWIN design group.

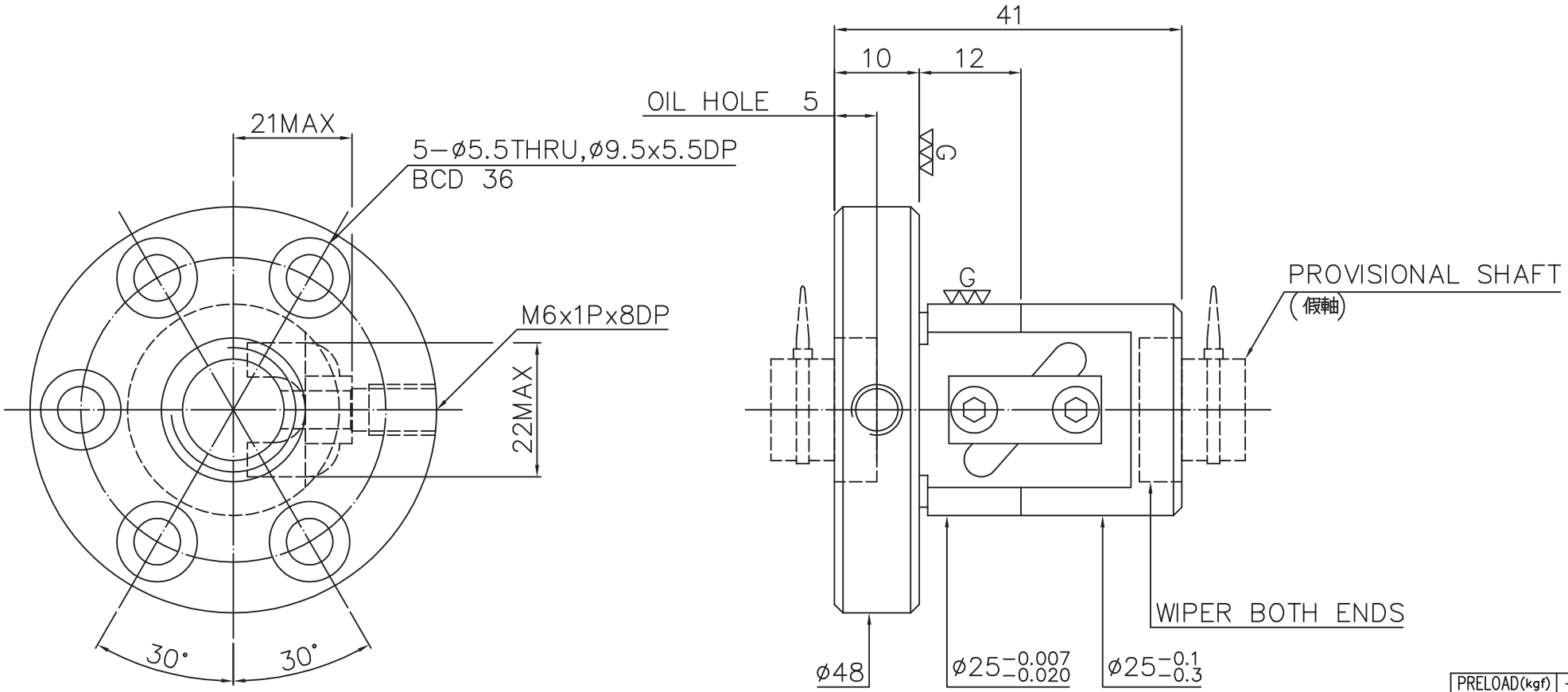


SPEC: R12−4B1−FSV

| | | | | | |
|---|---|---|---|---|---|
| MAX. AXIAL LOAD (kgf) | | LUBRCATION | | PRELOAD (kgf) | ---- |
| MAX. ROTATIONAL SPEED (rpm) | | SPACE BALL | | R.D | ---- |
| DN VALUE | | E1 TYPE ASSEMBLY METHOD | | S.F (kgf) | ---- |
| MAX. FEED RATE (m/min) | | CUSTOMER DRAWING NO. | | DRAG TORQUE (kgf-cm) | ---- |
| ACCELERATION (m/sec²) | | CUSTOMER M/C TYPE | | DIRECTION OF TURN | R |
| SUPPORT METHOD | | CUSTOMER AXIAL TYPE | | PC DIA. | 12.25 |
| | | | | BALL DIA. | 2.381 |
| | | | | BACKLASH | ---- |
| | | | | CIRCUIT | 2.5*1 |
| | | | | LEAD ANGLE | 5.93° |
| | | | | DYNAMIC (kgf) | ---- |
| | | | | STATIC (kgf) | ---- |
| | | | | LEAD | 4 |

THREAD LENGTH: + 0 − ; T ; +E −E

E300: ----

UNCHAMFERED USE ☐R0.5 ■R1 ☐R

| ROUGH M/C | FIN M/C | GRD |
|---|---|---|
| 25a | 6.3a | 0.4a |

SCALE 1:X

UNTOL DIMN mm

| UP TO 6 | 6 30 | 30 120 | 120 300 | 300 600 | 600 1200 | 1200 2400 | OVER 2400 |
|---|---|---|---|---|---|---|---|
| ±0.1 | ±0.2 | ±0.3 | ±0.4 | ±0.5 | ±0.8 | ±1.0 | ±1.5 |

HIWIN® BALLSCREWS

| | | | |
|---|---|---|---|
| MATAL | SH: ROLLED | DATE | 2005.12.21 |
| | NT: SNCM220 | DWG | 鄒健偉 |
| THREAD BALL TRACK HRC 56 ~ 62 | | APPD | 吳秋燕 |
| | | PROCESS NO. | G |
| CUSTR | HIWIN STD. | | |
| DWG.NO. | A10XFCA1 | | |

*BREAK SHARP EDGE UNLESS OTHER SPECIFIED.
*未畫倒角者以R0.5MAX

THREAD END ALLOWS ABOVE LENGTH OUT OF HARDNESS TOLERANCE

| DATE | MODIFICATION | APPROVED |
|---|---|---|
| | | |
| | | |

* PLEASE IGNORE CHINESE CHARACTERS WHICH ARE FOR OUR REFERENCE ONLY.

A11MEVA1

Released by HIWIN design group.

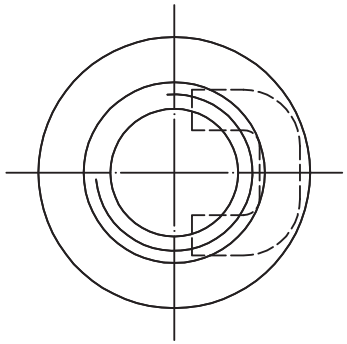

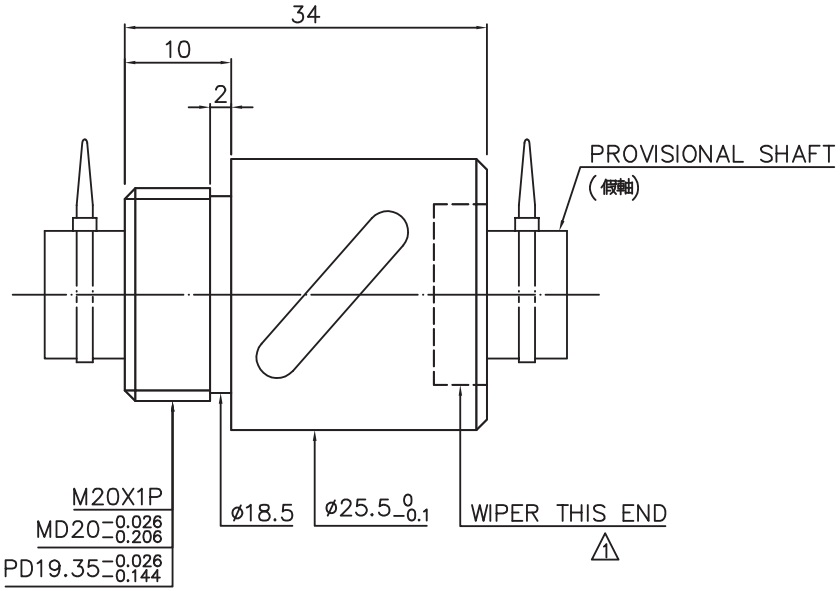


SPEC: R12-4B1-RSB

| | | | | | |
|---|---|---|---|---|---|
| MAX. AXIAL LOAD (kgf) | | LUBRICATION | | PRELOAD (kgf) | ~ |
| MAX. ROTATIONAL SPEED (rpm) | | SPACE BALL | | R.D. | ~ |
| DN VALUE | | E1 TYPE ASSEMBLY METHOD | | S.F. (kgf) | |
| MAX. FEED RATE (m/min) | | CUSTOMER DRAWING NO. | | DRAG TORQUE (kgf-cm) | |
| ACCELERATION (m/sec²) | | CUSTOMER M/C TYPE | | DIRECTION OF TURN | R |
| SUPPORT METHOD | | CUSTOMER AXIAL TYPE | | P.C. DIA. | 12.25 |
| | | | | BALL DIA. | 2.381 |
| | | | | BACKLASH | 0.02MAX |
| | | | | CIRCUIT | 2.5*1 |
| | | | | LEAD ANGLE | 5.93 |
| | | | | DYNAMIC (kgf) | 344 |
| | | | | STATIC (kgf) | 574 |
| | | | | LEAD | 4 |

THREAD LENGTH

+ 0 −

Tp, ep, ep

$V_{300p}$: ~

ep: ~

UNCHAMFERED USE ☐R0.5 ■R1 ☐R

| ROUGH M/C | FIN M/C | GRD |
|---|---|---|
| 25a | 6.3a | 0.4a |

SCALE 1:X

NORMAL TOLERANCE mm

| UP TO 6 | 6 30 | 30 120 | 120 300 | 300 600 | 600 1200 | 1200 2400 | OVER 2400 |
|---|---|---|---|---|---|---|---|
| ±0.1 | ±0.2 | ±0.3 | ±0.4 | ±0.5 | ±0.8 | ±1.0 | ±1.5 |

HIWIN® BALLSCREWS

| | | | |
|---|---|---|---|
| MAT. | SH: ROLLED | DATE | 2009.12.29 |
| | NT: SNCM220/Equivalent | DWG | Penny |
| THREAD BALL TRACK HRC 56 ~ 62 | | APPD | Cody |
| | | PROCESS NO. | G |
| CUSTR | LETROMEC(M) | | |
| DWG.NO. | A11MEVA1 | | |

*BREAK SHARP EDGE UNLESS OTHER SPECIFIED.
*未畫倒角者以R0.5MAX

THREAD END ALLOWS ABOVE LENGTH OUT OF HARDNESS TOLERANCE

| DATE | MODIFICATION | APPROVED |
|---|---|---|
| 2009.12.29 | MOD.1 | Cody |

* PLEASE IGNORE CHINESE CHARACTERS WHICH ARE FOR OUR REFERENCE ONLY.

A10UXQA1

Released by HIWIN design group.

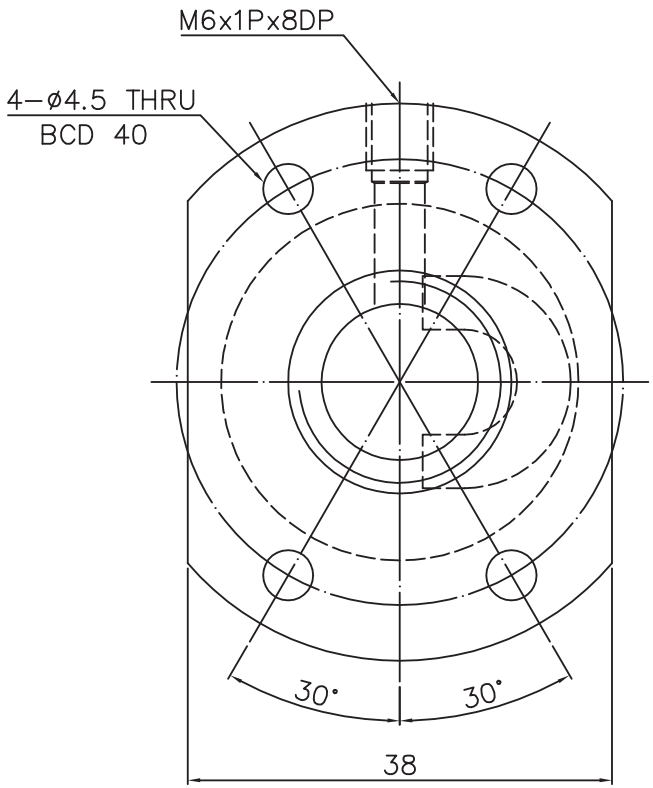


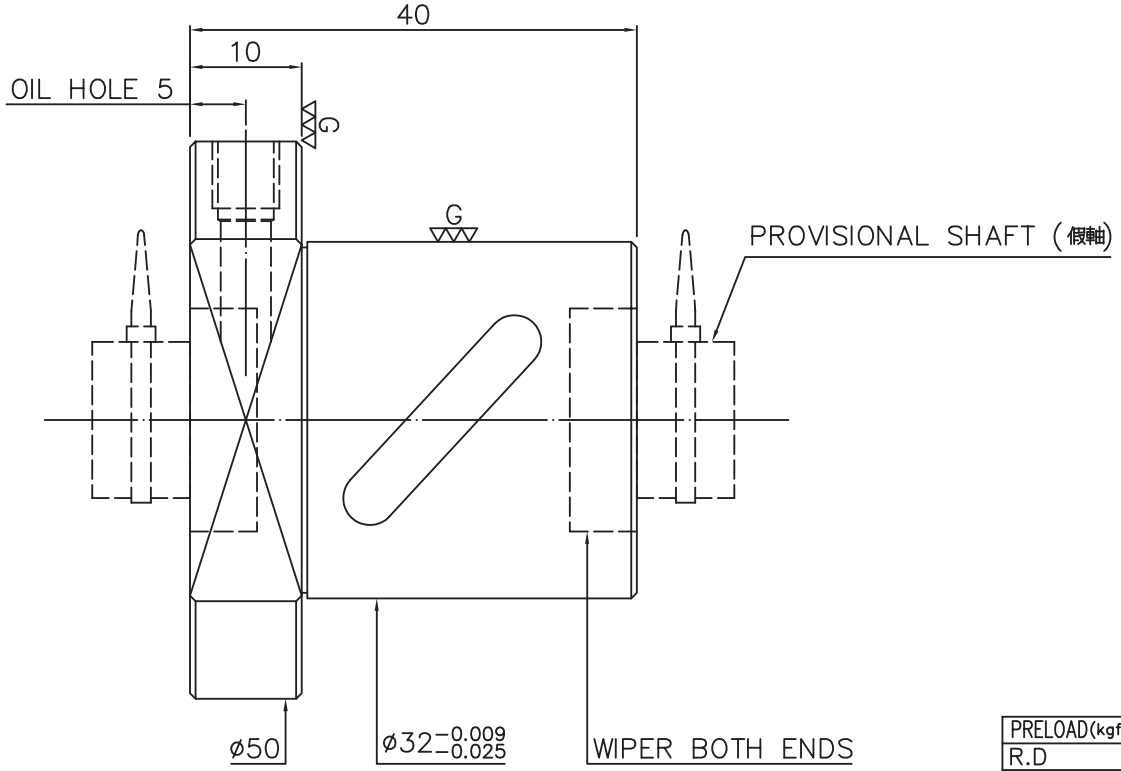


SPEC: R14−5B1−FSB

| | | | | | |
|---|---|---|---|---|---|
| MAX. AXIAL LOAD (kgf) | | LUBRCATION | | PRELOAD (kgf) | − |
| MAX. ROTATIONAL SPEED (rpm) | | SPACE BALL | | R.D | ~ |
| DN VALUE | | E1 TYPE ASSEMBLY METHOD | | S.F (kgf) | ——— |
| MAX. FEED RATE (m/min) | | CUSTOMER DRAWING NO. | | DRAG TORQUE (kgf−cm) | ——— |
| ACCELERATION (m/sec²) | | CUSTOMER MC TYPE | | DIRECTION OF TURN | R |
| SUPPORT METHOD | | CUSTOMER AXIAL TYPE | | PC DIA. | 14.8 |
| | | | | BALL DIA. | 3.175 |
| | | | | BACKLASH | ~ |
| | | | | CIRCUIT | 2.5*1 |
| | | | | LEAD ANGLE | 6.14 |
| | | | | DYNAMIC (kgf) | ~ |
| | | | | STATIC (kgf) | ~ |
| | | | | LEAD | 5 |

THREAD LENGTH

E300: ~

UNCHAMFERED USE ■R0.5 □R1 □R

| ROUGH M/C | FIN M/C | GRD | SCALE |
|---|---|---|---|
| 25a | 6.3a | 0.4a | 1:X |

UNTOL DIMN mm

| UP TO 6 | 6 30 | 30 120 | 120 300 | 300 600 | 600 1200 | 1200 2400 | OVER 2400 |
|---|---|---|---|---|---|---|---|
| ±0.1 | ±0.2 | ±0.3 | ±0.4 | ±0.5 | ±0.8 | ±1.0 | ±1.5 |

HIWIN® BALLSCREWS

| | | | |
|---|---|---|---|
| MATAL | SH: ROLLED | DATE | 01.31.'05 |
| | NT: SNCM220 | DWG | 吳秋燕 |
| THREAD BALL TRACK HRC 56 ~ 62 | | APPD | 楊創堡 |
| | | PROCESS NO. | G |
| CUSTR | HIWIN | | |
| DWG.NO. | A10UXQA1 | | |

*BREAK SHARP EDGE UNLESS OTHER SPECIFIED.
*未畫倒角者以R0.5MAX

THREAD END ALLOWS ABOVE LENGTH OUT OF HARDNESS TOLERANCE

| DATE | MODIFICATION | APPROVED |
|---|---|---|
| | | |
| | | |

* PLEASE IGNORE CHINESE CHARACTERS WHICH ARE FOR OUR REFERENCE ONLY.

A11DHWA1 | Released by HIWIN design group.

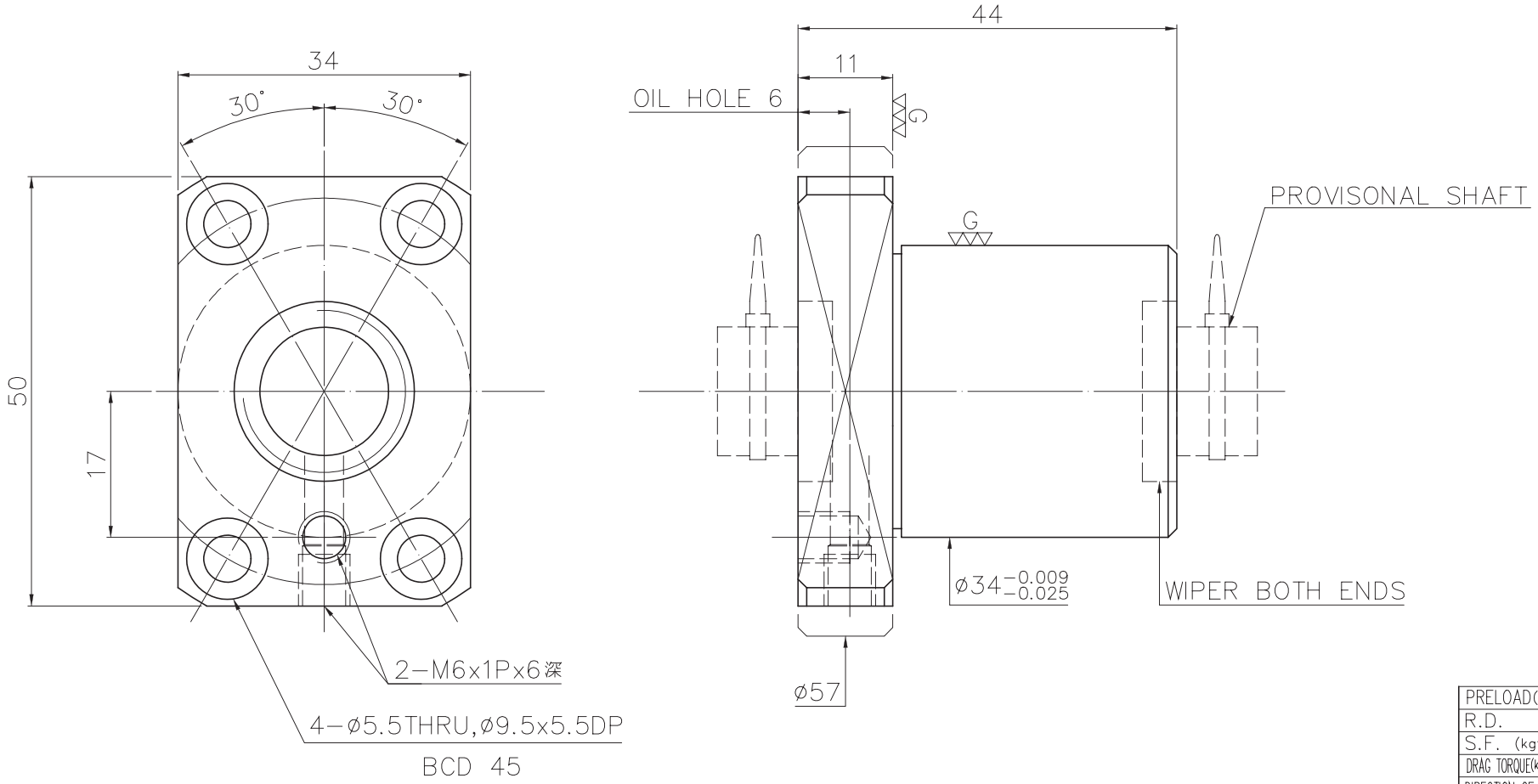


SPEC: 2R15−10K3−FSC

| | | | | | |
|---|---|---|---|---|---|
| MAX. AXIAL LOAD (kgf) | | LUBRICATION | | PRELOAD (kgf) | − |
| MAX. ROTATIONAL SPEED (rpm) | | SPACE BALL | | R.D. | − |
| DN VALUE | | E1 TYPE ASSEMBLY METHOD | | S.F. (kgf) | ——— |
| MAX. FEED RATE (m/min) | | CUSTOMER DRAWING NO. | | DRAG TORQUE (kgf-cm) | ——— |
| ACCELERATION (m/sec²) | | CUSTOMER MC TYPE | | DIRECTION OF TURN | R |
| SUPPORT METHOD | | CUSTOMER AXIAL TYPE | | P.C. DIA. | 15.64 |
| | | | | BALL DIA. | 3.175 |
| | | | | BACKLASH | 0.04MAX |
| | | | | CIRCUIT | 3 |
| | | | | LEAD ANGLE | 11.5 |
| | | | | DYNAMIC (kgf) | 860 |
| | | | | STATIC (kgf) | 1746 |
| | | | | LEAD | 10 |

THREAD LENGTH

$V_{300p}$: −

ep: ~

UNCHAMFERED USE ■R0.5 □R1 □R

| ROUGH M/C | FIN M/C | GRD | SCALE |
|---|---|---|---|
| 25a | 6.3a | 0.4a | 1:X |

NORMAL TOLERANCE mm

| UP TO 6 | 6 30 | 30 120 | 120 300 | 300 600 | 600 1200 | 1200 2400 | OVER 2400 |
|---|---|---|---|---|---|---|---|
| ±0.1 | ±0.2 | ±0.3 | ±0.4 | ±0.5 | ±0.8 | ±1.0 | ±1.5 |

HIWIN® BALLSCREWS

| | | | |
|---|---|---|---|
| MAT. | SH: ROLLED | DATE | 2008.11.11 |
| | NT: SNCM220/Equivalent | DWG | WCWU |
| THREAD BALL TRACK HRC 56 ~ 62 | | APPD | Michelle |
| | | PROCESS NO. | G |
| CUSTR | LETROMEC(M) | | |
| DWG.NO. | A11DHWA1 | | |

*BREAK SHARP EDGE UNLESS OTHER SPECIFIED.
*未畫倒角者以R0.5MAX

THREAD END ALLOWS ABOVE LENGTH OUT OF HARDNESS TOLERANCE

| DATE | MODIFICATION | APPROVED |
|---|---|---|
| | | |
| | | |

* PLEASE IGNORE CHINESE CHARACTERS WHICH ARE FOR OUR REFERENCE ONLY.

A11DUQA2 | Released by HIWIN design group.

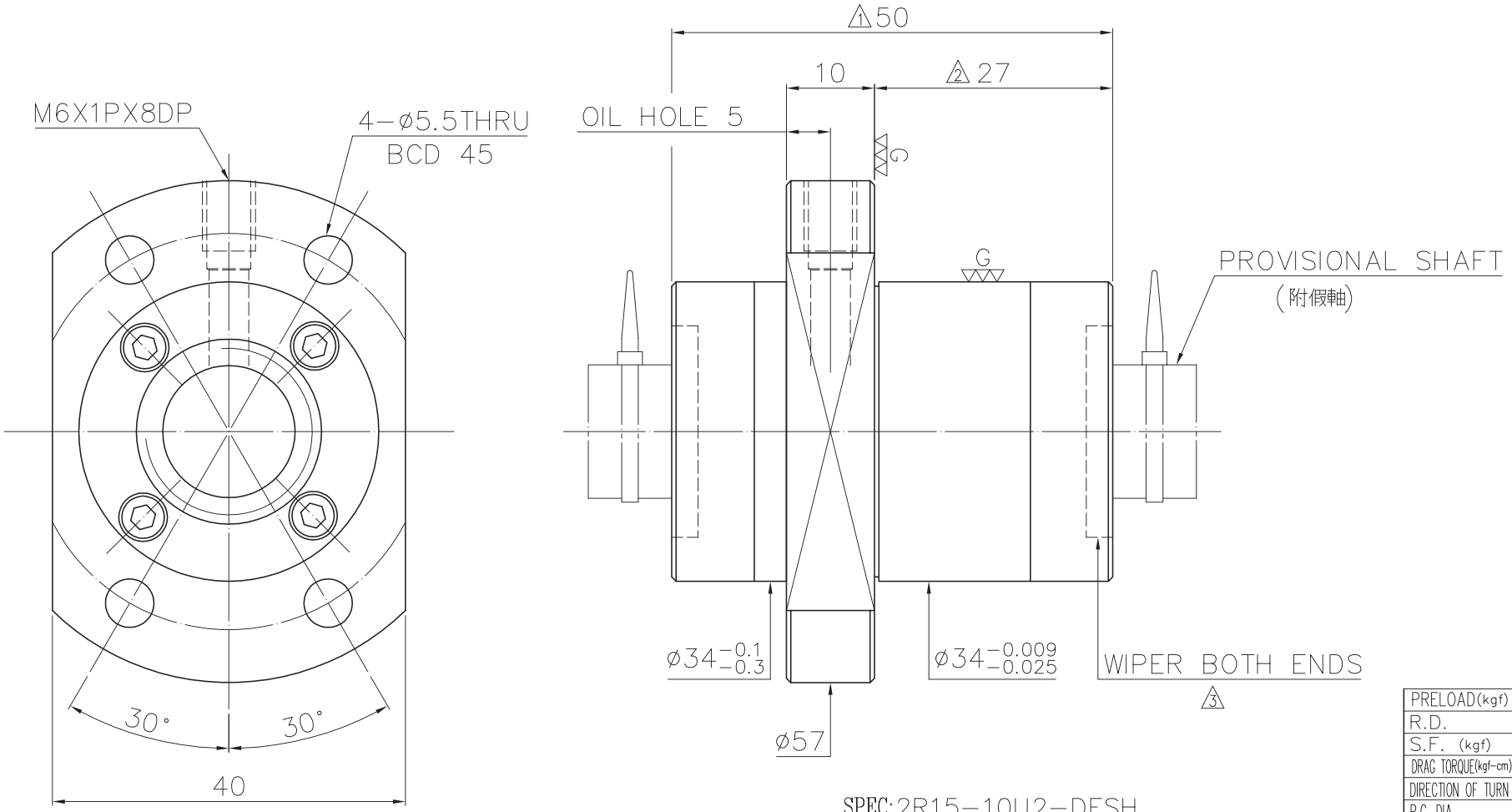


SPEC: 2R15-10U2-DFSH

| | | | | | |
|---|---|---|---|---|---|
| MAX. AXIAL LOAD (kgf) | | LUBRICATION | | PRELOAD (kgf) | ~ |
| MAX. ROTATIONAL SPEED (rpm) | | SPACE BALL | | R.D. | ~ |
| DN VALUE | | E1 TYPE ASSEMBLY METHOD | | S.F. (kgf) | |
| MAX. FEED RATE (m/min) | | CUSTOMER DRAWING NO. | | DRAG TORQUE (kgf-cm) | |
| ACCELERATION (m/sec²) | | CUSTOMER MC TYPE | | DIRECTION OF TURN | R |
| SUPPORT METHOD | | CUSTOMER AXIAL TYPE | | P.C. DIA. | 15.64 |
| | | | | BALL DIA. | 3.175 |
| | | | | BACKLASH | 0.04MAX |
| | | | | CIRCUIT | 2.8*2 |
| | | | | LEAD ANGLE | 11.5 |
| | | | | DYNAMIC (kgf) | 1009 |
| | | | | STATIC (kgf) | 2039 |
| | | | | LEAD /PITCH | 10/5 |

THREAD LENGTH

+ 0 −

Tp, +ep, −ep

$v_{300p}$: ~

ep: ~

UNCHAMFERED USE □C0.5 ■C1 □C

| ROUGH M/C | FIN M/C | GRD | SCALE |
|---|---|---|---|
| 25a | 6.3a | 0.4a | 1:X |

NORMAL TOLERANCE mm

| UP TO 6 | 6 30 | 30 120 | 120 300 | 300 600 | 600 1200 | 1200 2400 | OVER 2400 |
|---|---|---|---|---|---|---|---|
| ±0.1 | ±0.2 | ±0.3 | ±0.4 | ±0.5 | ±0.8 | ±1.0 | ±1.5 |

HIWIN® BALLSCREWS

| | | | |
|---|---|---|---|
| MAT. | SH: ROLLED | DATE | 2011.03.28 |
| | NT: SNCM220/Equivalent | DWG | Akuan |
| THREAD BALL TRACK HRC 56 ~ 62 | | CHK | Sting |
| | | APPD | Cody |
| CUSTR | △4 LETROMEC(M) | | |
| DWG.NO. | A11DUQA2 | | |

*BREAK SHARP EDGE UNLESS OTHER SPECIFIED.
*未畫倒角者去毛邊 (C0.2MAX)

THREAD END ALLOWS ABOVE LENGTH OUT OF HARDNESS TOLERANCE

| DATE | MODIFICATION | APPROVED |
|---|---|---|
| 2011.04.14 | MOD. △4 | Cody |
| 2011.03.28 | MOD. △1~△3 | Cody |

* PLEASE IGNORE CHINESE CHARACTERS WHICH ARE FOR OUR REFERENCE ONLY.

A11DHXA1 | Released by HIWIN design group.

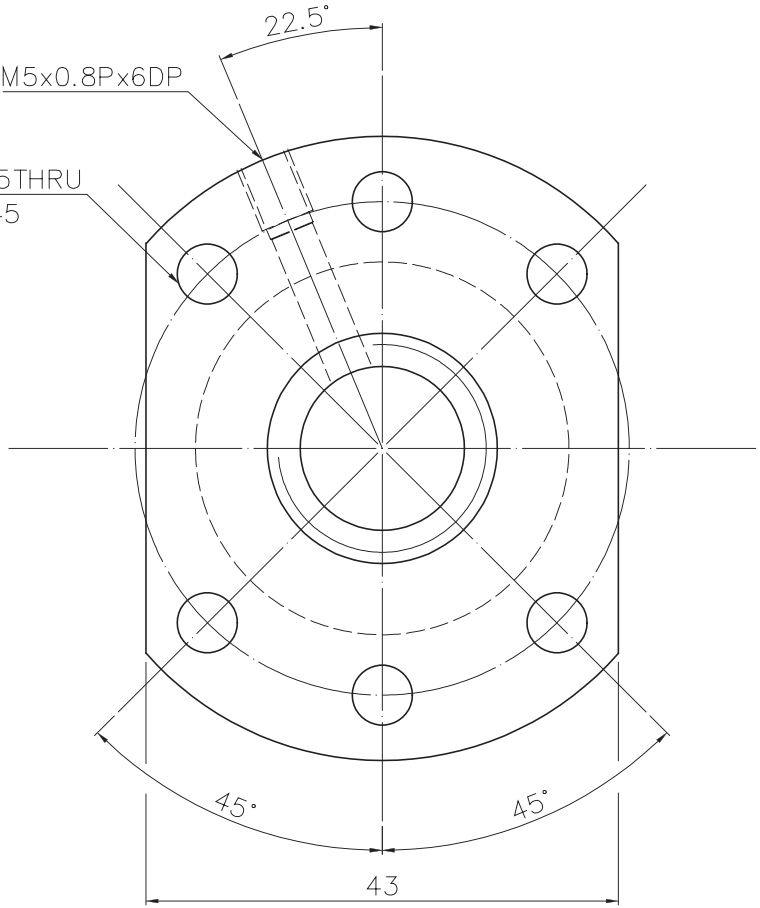


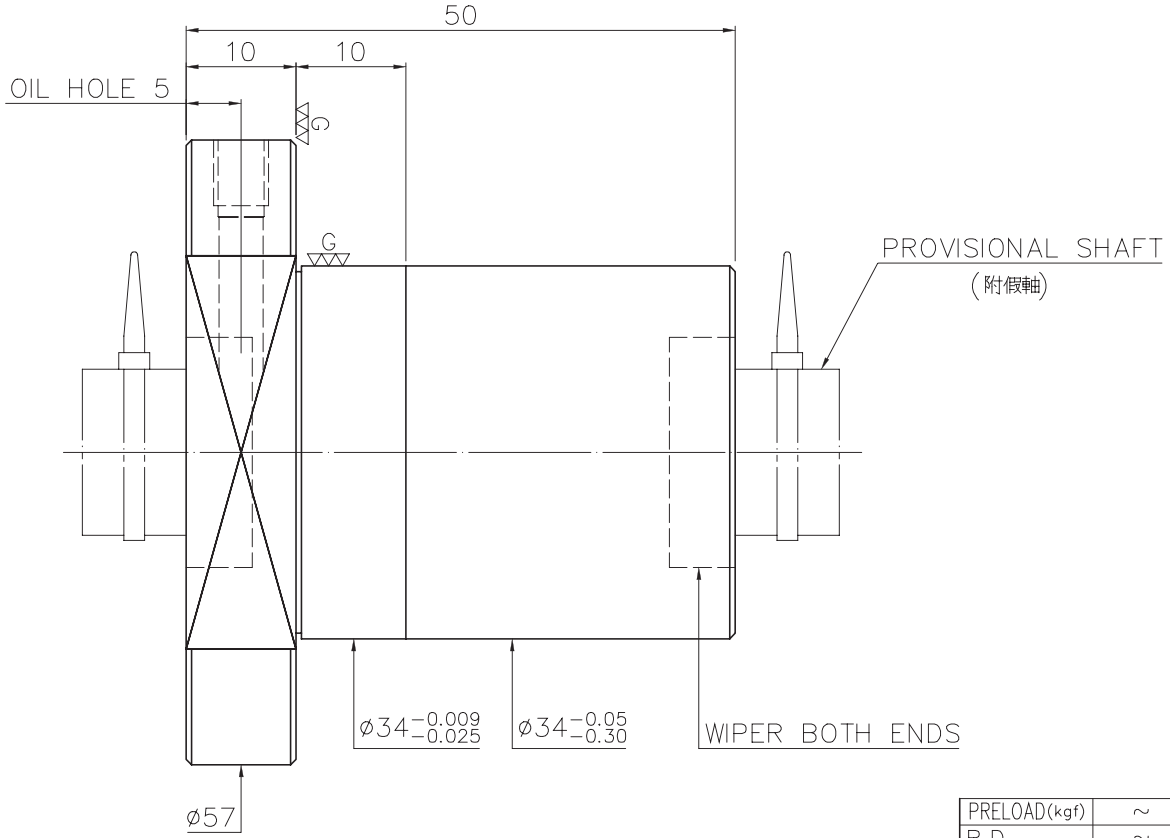


SPEC: 4R15−20K2−FSC

| | | | | | |
|---|---|---|---|---|---|
| MAX. AXIAL LOAD (kgf) | | LUBRICATION | | PRELOAD (kgf) | ~ |
| MAX. ROTATIONAL SPEED (rpm) | | SPACE BALL | | R.D. | ~ |
| DN VALUE | | E1 TYPE ASSEMBLY METHOD | | S.F. (kgf) | |
| MAX. FEED RATE (m/min) | | CUSTOMER DRAWING NO. | | DRAG TORQUE (kgf-cm) | |
| ACCELERATION (m/sec²) | | CUSTOMER MC TYPE | | DIRECTION OF TURN | R |
| SUPPORT METHOD | | CUSTOMER AXIAL TYPE | | P.C. DIA. | 15.675 |
| | | | | BALL DIA. | 3.175 |
| | | | | BACKLASH | 0.04MAX |
| | | | | CIRCUIT | 2 |
| | | | | LEAD ANGLE | 22.1 |
| | | | | DYNAMIC (kgf) | 570 |
| | | | | STATIC (kgf) | 1132 |
| | | | | LEAD | 20 |

THREAD LENGTH

$V_{300p}$: ~

ep: ~

UNCHAMFERED USE ☐R0.5 ■R1 ☐R

| ROUGH M/C | FIN M/C | GRD | SCALE |
|---|---|---|---|
| 25a | 6.3a | 0.4a | 1:X |

NORMAL TOLERANCE mm

| UP TO 6 | 6 30 | 30 120 | 120 300 | 300 600 | 600 1200 | 1200 2400 | OVER 2400 |
|---|---|---|---|---|---|---|---|
| ±0.1 | ±0.2 | ±0.3 | ±0.4 | ±0.5 | ±0.8 | ±1.0 | ±1.5 |

HIWIN® BALLSCREWS

| | | | |
|---|---|---|---|
| MAT. | SH: ROLLED | DATE | 2008.11.11 |
| | NT: SNCM220/Equivalent | DWG | WCWU |
| THREAD BALL TRACK HRC 56 ~ 62 | | APPD | Michelle |
| | | PROCESS NO. | G |
| CUSTR | LETROMEC(M) | | |
| DWG.NO. | A11DHXA1 | | |

*BREAK SHARP EDGE UNLESS OTHER SPECIFIED.
*未畫倒角者以R0.5MAX

THREAD END ALLOWS ABOVE LENGTH OUT OF HARDNESS TOLERANCE

| DATE | MODIFICATION | APPROVED |
|---|---|---|
| | | |
| | | |

* PLEASE IGNORE CHINESE CHARACTERS WHICH ARE FOR OUR REFERENCE ONLY.

A11DUPA1 | Released by HIWIN design group.

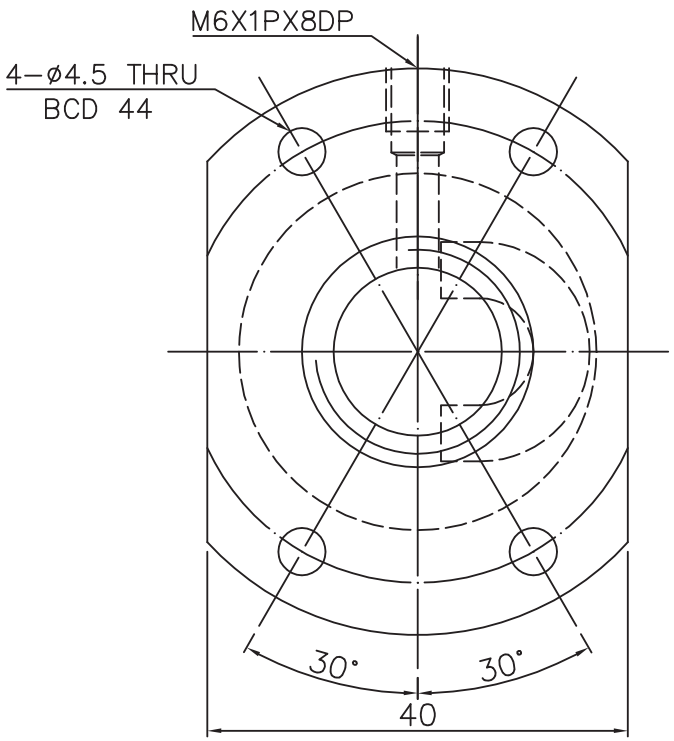


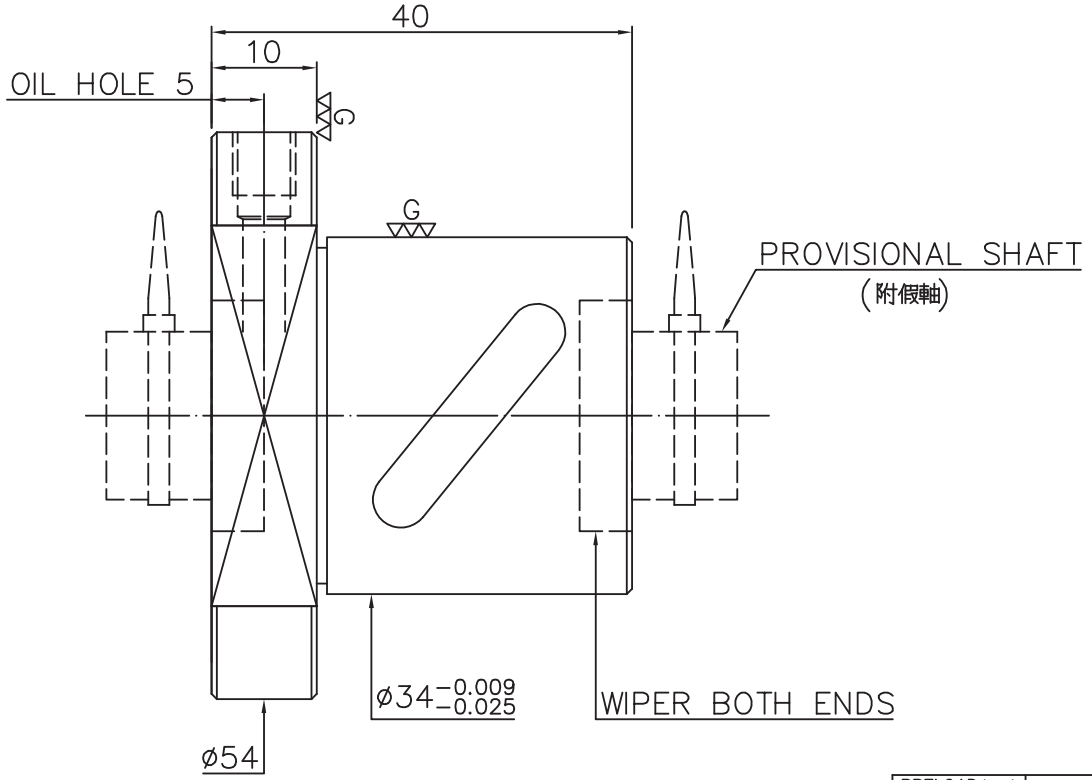


SPEC: R16-5B1-FSB

| | | | | | |
|---|---|---|---|---|---|
| MAX. AXIAL LOAD (kgf) | | LUBRICATION | | PRELOAD (kgf) | ~ |
| MAX. ROTATIONAL SPEED (rpm) | | SPACE BALL | | R.D. | ~ |
| DN VALUE | | E1 TYPE ASSEMBLY METHOD | | S.F. (kgf) | |
| MAX. FEED RATE (m/min) | | CUSTOMER DRAWING NO. | | DRAG TORQUE (kgf-cm) | |
| ACCELERATION (m/sec²) | | CUSTOMER MC TYPE | | DIRECTION OF TURN | R |
| SUPPORT METHOD | | CUSTOMER AXIAL TYPE | | P.C. DIA. | 16.175 |
| | | | | BALL DIA. | 3.175 |
| | | | | BACKLASH | 0.04MAX |
| | | | | CIRCUIT | 2.5*1 |
| | | | | LEAD ANGLE | 5.62 |
| | | | | DYNAMIC (kgf) | 679 |
| | | | | STATIC (kgf) | 1226 |
| | | | | LEAD | 5 |

THREAD LENGTH

+ 0 −

Tp, He, ep

$V_{300p}$: ~

ep: ~

UNCHAMFERED USE ■R0.5 □R1 □R

| ROUGH M/C | FIN M/C | GRD |
|---|---|---|
| 25a | 6.3a | 0.4a |

SCALE 1:X

NORMAL TOLERANCE mm

| UP TO 6 | 6 30 | 30 120 | 120 300 | 300 600 | 600 1200 | 1200 2400 | OVER 2400 |
|---|---|---|---|---|---|---|---|
| ±0.1 | ±0.2 | ±0.3 | ±0.4 | ±0.5 | ±0.8 | ±1.0 | ±1.5 |

HIWIN® BALLSCREWS

| | | | |
|---|---|---|---|
| MAT. | SH: ROLLED | DATE | 2008.11.28 |
| | NT: SNCM220/Equivalent | DWG | Eric |
| THREAD BALL TRACK HRC 56 ~ 62 | | APPD | Michelle |
| | | PROCESS NO. | G |
| CUSTR | LETROMEC(M) | | |
| DWG.NO. | A11DUPA1 | | |

*BREAK SHARP EDGE UNLESS OTHER SPECIFIED.
*未畫倒角者以R0.5MAX

THREAD END ALLOWS ABOVE LENGTH OUT OF HARDNESS TOLERANCE

| DATE | MODIFICATION | APPROVED |
|---|---|---|
| | | |
| | | |

* PLEASE IGNORE CHINESE CHARACTERS WHICH ARE FOR OUR REFERENCE ONLY.

A11DHJA1 | Released by HIWIN design group.

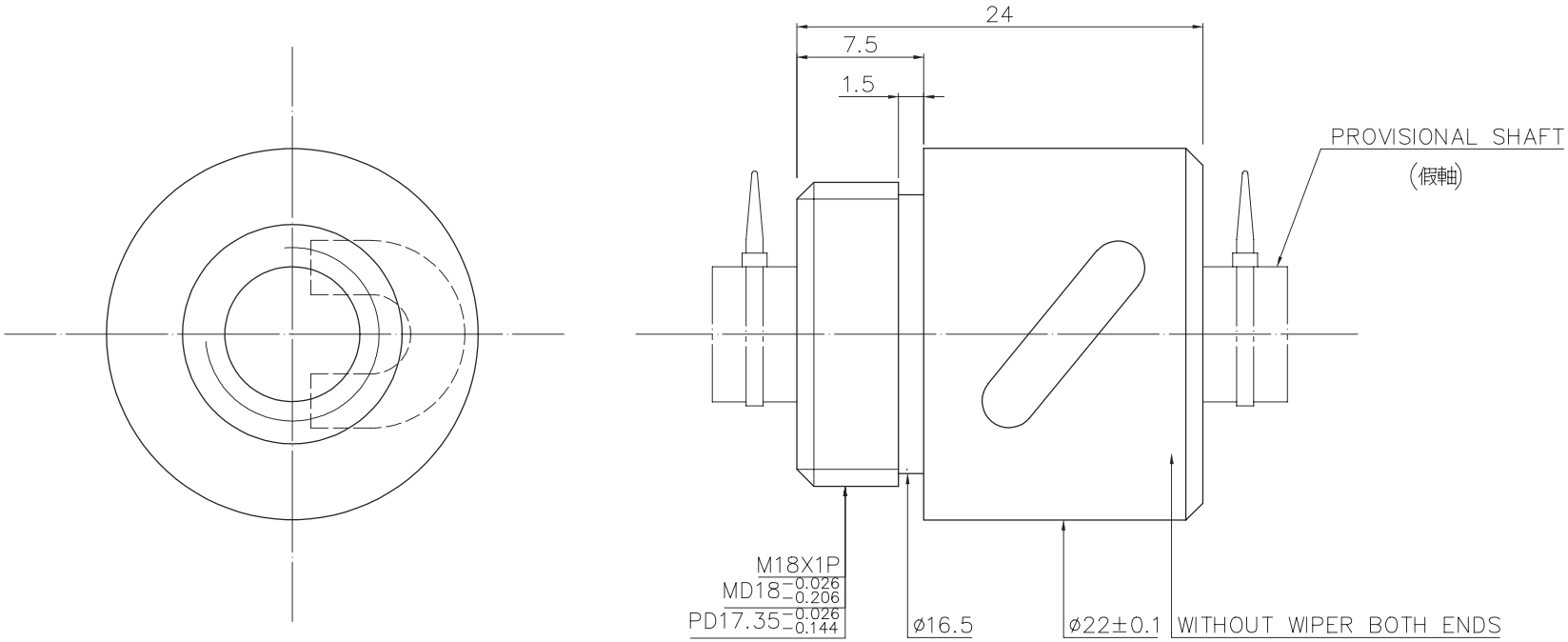


| | |
|---|---|
| PRELOAD(kgf) | ~ |
| R.D. | 6.136 |
| S.F. (kgf) | |
| DRAG TORQUE(kgf-cm) | |
| DIRECTION OF TURN | R |
| P.C. DIA. | 8.2 |
| BALL DIA. | 2 |
| BACKLASH | 0.02MAX |
| CIRCUIT | 2.5*1 |
| LEAD ANGLE | 5.54 |
| DYNAMIC (kgf) | 218 |
| STATIC (kgf) | 317 |
| LEAD | 2.5 |

SPEC: R8−2.5B1−RSB

| | | | |
|---|---|---|---|
| MAX. AXIAL LOAD(kgf) | | LUBRICATION | |
| MAX. ROTATIONAL SPEED (rpm) | | SPACE BALL | |
| DN VALUE | | E1 TYPE ASSEMBLY METHOD | |
| MAX. FEED RATE(m/min) | | CUSTOMER DRAWING NO. | |
| ACCELERATION(m/sec²) | | CUSTOMER MC TYPE | |
| SUPPORT METHOD | | CUSTOMER AXIAL TYPE | |
| | | | |

THREAD LENGTH

+ 0 −

Tp, +ep, −ep

$\mathcal{V}$300p: ~

ep: ~

UNCHAMFERED USE ■R0.5 □R1 □R

| ROUGH M/C | FIN M/C | GRD |
|---|---|---|
| 25a | 6.3a | 0.4a |

SCALE 1:X

NORMAL TOLERANCE mm

| UP TO 6 | 6 30 | 30 120 | 120 300 | 300 600 | 600 1200 | 1200 2400 | OVER 2400 |
|---|---|---|---|---|---|---|---|
| ±0.1 | ±0.2 | ±0.3 | ±0.4 | ±0.5 | ±0.8 | ±1.0 | ±1.5 |

HIWIN® BALLSCREWS

| | | | |
|---|---|---|---|
| MAT. | SH: ROLLED | DATE | 2008.11.11 |
| | NT: SNCM220/Equivalent | DWG | Chunlin |
| THREAD BALL TRACK HRC 56 ~ 62 | | APPD | Michelle |
| | | PROCESS NO. | G |
| CUSTR | LETROMEC(M) | | |
| DWG.NO. | A11DHJA1 | | |

*BREAK SHARP EDGE UNLESS OTHER SPECIFIED.
*未畫倒角者以R0.5MAX

THREAD END ALLOWS ABOVE LENGTH OUT OF HARDNESS TOLERANCE

| DATE | MODIFICATION | APPROVED |
|---|---|---|
| | | |
| | | |

* PLEASE IGNORE CHINESE CHARACTERS WHICH ARE FOR OUR REFERENCE ONLY.