A11BFZA1

Released by HIWIN design group.

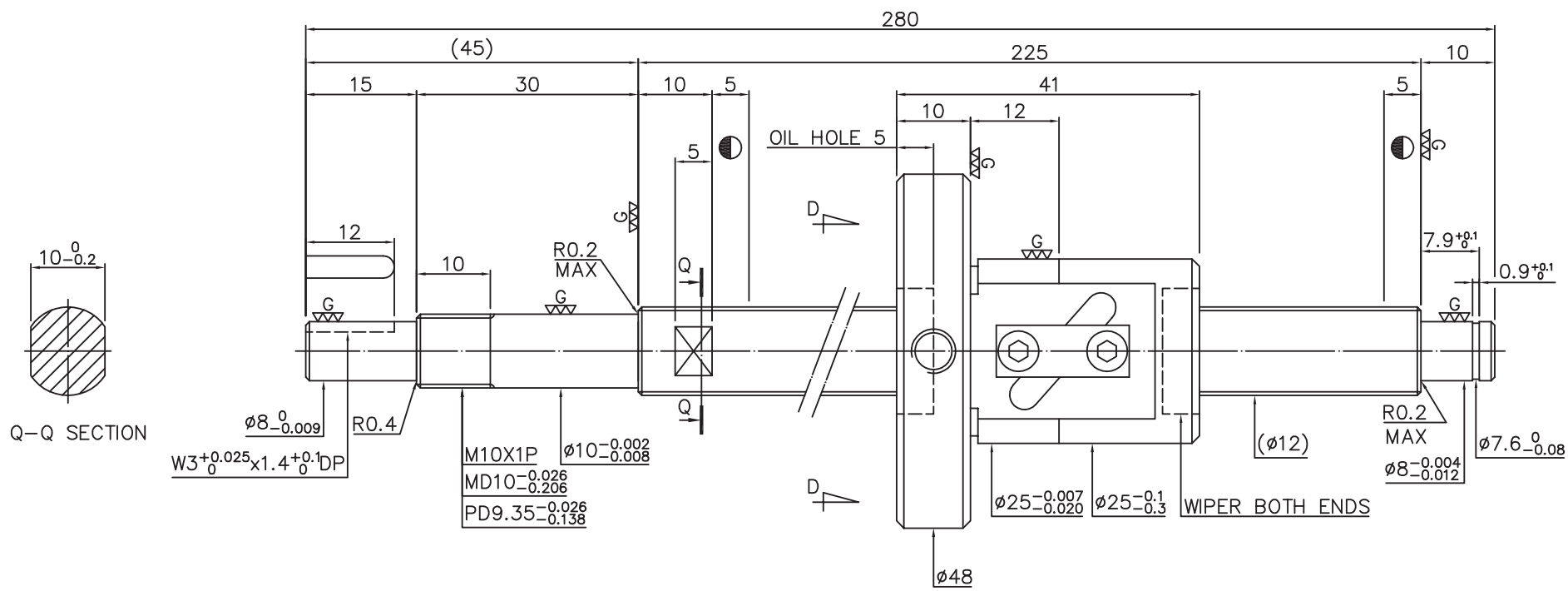


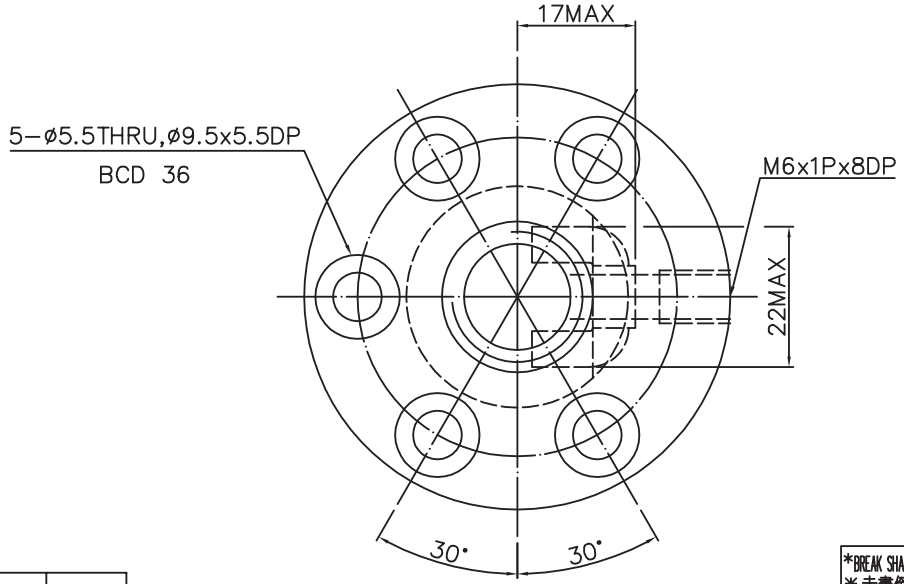


D−D VIEW

SPEC:R12−4B1−FSV−225−280−0.05

| | | | | | |
|---|---|---|---|---|---|
| MAX. AXIAL LOAD(kgf) | | LUBRICATION | | PRELOAD(kgf) | ~ |
| MAX. ROTATIONAL SPEED(rpm) | | SPACE BALL | | R.D | 9.792 |
| DN VALUE | | E1 TYPE ASSEMBLY METHOD | | S.F (kgf) | |
| MAX. FEED RATE(m/min) | | CUSTOMER DRAWING NO. | MF302239−00 | DRAG TORQUE(kgf−cm) | |
| ACCELERATION(m/sec²) | | CUSTOMER MC TYPE | | DIRECTION OF TURN | R |
| SUPPORT METHOD | | CUSTOMER AXIAL TYPE | Z | PC DIA. | 12.25 |
| | | | | BALL DIA. | 2.381 |
| | | | | BACKLASH | 0.07MAX |
| | | | | CIRCUIT | 2.5*1 |
| | | | | LEAD ANGLE | 5.93 |
| | | | | DYNAMIC (kgf) | 344 |
| | | | | STATIC (kgf) | 574 |
| | | | | LEAD | 4 |

THREAD LENGTH

e300: 0.05

E: 0.052

UNCHAMFERED USE ■R0.5 □R1 □ R

| ROUGH M/C | FIN M/C | GRD |
|---|---|---|
| 25a | 6.3a | 0.4a |

SCALE 1:X

UNTOL DIMN mm

| UP TO 6 | 6 30 | 30 120 | 120 300 | 300 600 | 600 1200 | 1200 2400 | OVER 2400 |
|---|---|---|---|---|---|---|---|
| ±0.1 | ±0.2 | ±0.3 | ±0.4 | ±0.5 | ±0.8 | ±1.0 | ±1.5 |

HIWIN® BALLSCREWS

| | | | |
|---|---|---|---|
| MATAL | SH: CF53/Equivalent | DATE | 2008.08.07 |
| | NT: SNCM220/Equivalent | DWG | YU−PEI |
| THREAD BALL TRACK HRC 56 ~ 62 | | APPD | MICHELLE |
| | | PROCESS NO. | G |
| CUSTR | LETROMEC (KL) | | |
| DWG.NO. | A11BFZA1 | | |

*BREAK SHARP EDGE UNLESS OTHER SPECIFIED.
*未畫倒角者以R0.5MAX

THREAD END ALLOWS ABOVE LENGTH OUT OF HARDNESS TOLERANCE

| DATE | MODIFICATION | APPROVED |
|---|---|---|
| | | |
| | | |

* PLEASE IGNORE CHINESE CHARACTERS WHICH ARE FOR OUR REFERENCE ONLY.

A11BFXA1 | Released by HIWIN design group.

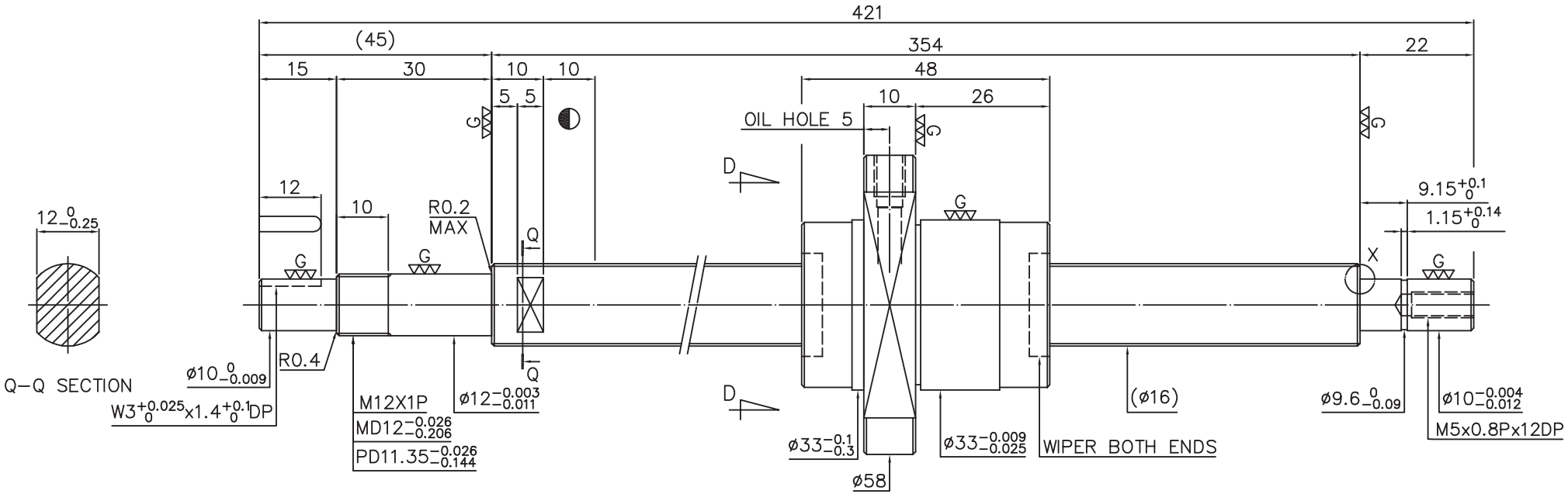


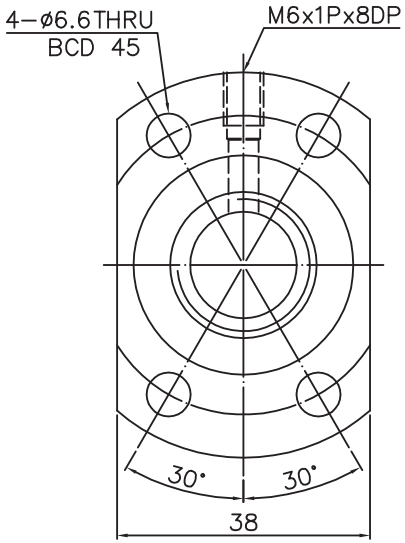


D−D VIEW

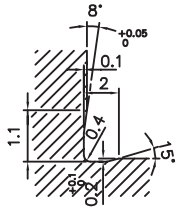


F0.4X0.2DIN509

X DETAIL

SPEC: 4R16−16S2−DFSH−354−421−0.05

| | | | | | |
|---|---|---|---|---|---|
| MAX. AXIAL LOAD (kgf) | | LUBRICATION | | PRELOAD (kgf) | ~ |
| MAX. ROTATIONAL SPEED (rpm) | | SPACE BALL | | R.D. | 13.344 |
| DN VALUE | | E1 TYPE ASSEMBLY METHOD | | S.F. (kgf) | |
| MAX. FEED RATE (m/min) | | CUSTOMER DRAWING NO. | MF301328−00 | DRAG TORQUE (kgf−cm) | |
| ACCELERATION (m/sec²) | | CUSTOMER M/C TYPE | | DIRECTION OF TURN | R |
| SUPPORT METHOD | | CUSTOMER AXIAL TYPE | Y | P.C. DIA. | 16.62 |
| | | | | BALL DIA. | 3.175 |
| | | | | BACKLASH | 0.04MAX |
| | | | | CIRCUIT | 1.8*2 |
| | | | | LEAD ANGLE | 17.04 |
| | | | | DYNAMIC (kgf) | 708 |
| | | | | STATIC (kgf) | 1382 |
| | | | | LEAD / PITCH | 16/4 |

THREAD LENGTH: + 0 − ; +E −E ; T

e300: 0.05

E: 0.059

UNCHAMFERED USE ■R0.5 □R1 □R

| ROUGH M/C | FIN M/C | GRD |
|---|---|---|
| 25a | 6.3a | 0.4a |

SCALE 1:X

NORMAL TOLERANCE mm

| UP TO 6 | 6 30 | 30 120 | 120 300 | 300 600 | 600 1200 | 1200 2400 | OVER 2400 |
|---|---|---|---|---|---|---|---|
| ±0.1 | ±0.2 | ±0.3 | ±0.4 | ±0.5 | ±0.8 | ±1.0 | ±1.5 |

HIWIN® BALLSCREWS

| | | | |
|---|---|---|---|
| MAT. | SH: CF53/Equivalent | DATE | 2008.08.06 |
| | NT: SNCM220/Equivalent | DWG | YU−PEI |
| THREAD BALL TRACK HRC 56 ~ 62 | | APPD | MICHELLE |
| | | PROCESS NO. | G |
| CUSTR | LETROMEC(LK) | | |
| DWG.NO. | A11BFXA1 | | |

*BREAK SHARP EDGE UNLESS OTHER SPECIFIED.
*未畫倒角者以R0.5MAX

THREAD END ALLOWS ABOVE LENGTH OUT OF HARDNESS TOLERANCE

| DATE | MODIFICATION | APPROVED |
|---|---|---|
| | | |
| | | |

* PLEASE IGNORE CHINESE CHARACTERS WHICH ARE FOR OUR REFERENCE ONLY.

A11BFYA1 | Released by HIWIN design group.

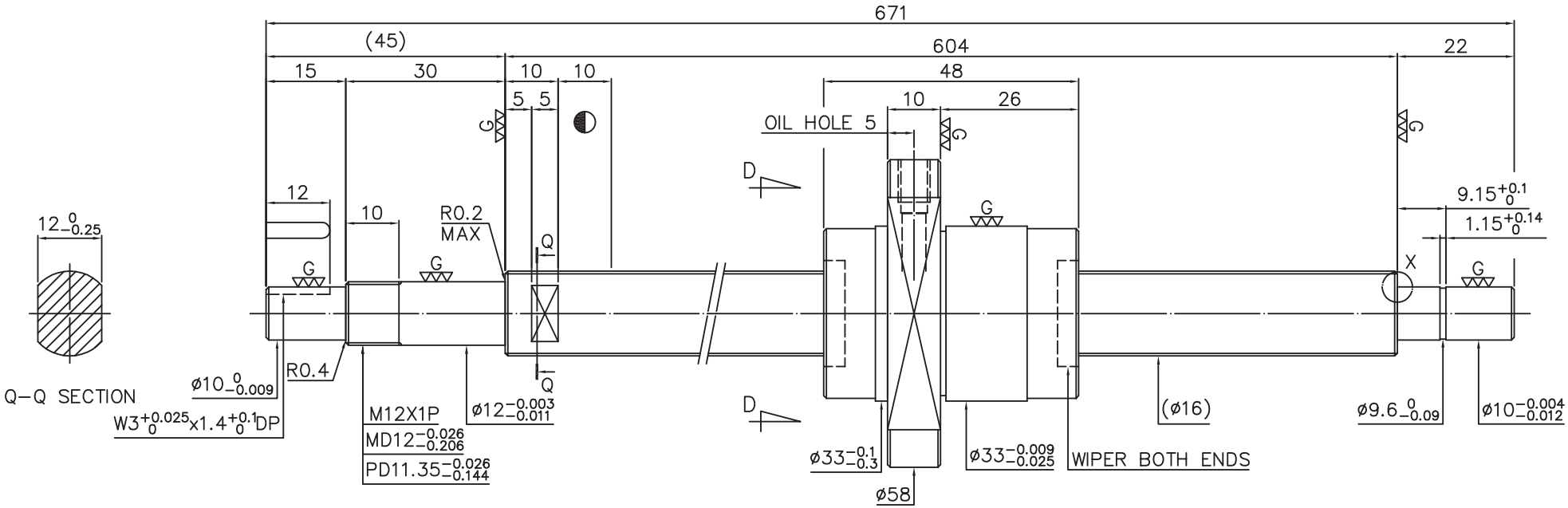


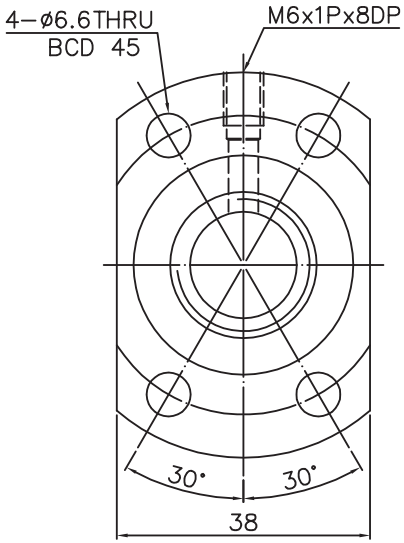


D−D VIEW

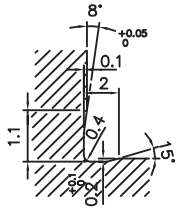


F0.4X0.2DIN509

X DETAIL

SPEC: 4R16−16S2−DFSH−604−671−0.05

| | | | | | |
|---|---|---|---|---|---|
| MAX. AXIAL LOAD (kgf) | | LUBRICATION | | PRELOAD (kgf) | ~ |
| MAX. ROTATIONAL SPEED (rpm) | | SPACE BALL | | R.D. | 13.344 |
| DN VALUE | | E1 TYPE ASSEMBLY METHOD | | S.F. (kgf) | |
| MAX. FEED RATE (m/min) | | CUSTOMER DRAWING NO. | MF301315−00 | DRAG TORQUE (kgf−cm) | |
| ACCELERATION (m/sec²) | | CUSTOMER M/C TYPE | | DIRECTION OF TURN | R |
| SUPPORT METHOD | | CUSTOMER AXIAL TYPE | X | P.C. DIA. | 16.62 |
| | | | | BALL DIA. | 3.175 |
| | | | | BACKLASH | 0.04MAX |
| | | | | CIRCUIT | 1.8*2 |
| | | | | LEAD ANGLE | 17.04 |
| | | | | DYNAMIC (kgf) | 708 |
| | | | | STATIC (kgf) | 1382 |
| | | | | LEAD / PITCH | 16/4 |

THREAD LENGTH: + 0 −; +E −E; T

e300: 0.05

E: 0.1

UNCHAMFERED USE ■R0.5 □R1 □R

| ROUGH M/C | FIN M/C | GRD |
|---|---|---|
| 25a | 6.3a | 0.4a |

SCALE 1:X

NORMAL TOLERANCE mm

| UP TO 6 | 6 30 | 30 120 | 120 300 | 300 600 | 600 1200 | 1200 2400 | OVER 2400 |
|---|---|---|---|---|---|---|---|
| ±0.1 | ±0.2 | ±0.3 | ±0.4 | ±0.5 | ±0.8 | ±1.0 | ±1.5 |

HIWIN® BALLSCREWS

| | | | |
|---|---|---|---|
| MAT. | SH: CF53/Equivalent | DATE | 2008.08.06 |
| | NT: SNCM220/Equivalent | DWG | YU−PEI |
| THREAD BALL TRACK HRC 56 ~ 62 | | APPD | MICHELLE |
| | | PROCESS NO. | G |
| CUSTR | LETROMEC(LK) | | |
| DWG.NO. | A11BFYA1 | | |

*BREAK SHARP EDGE UNLESS OTHER SPECIFIED.
*未畫倒角者以R0.5MAX

THREAD END ALLOWS ABOVE LENGTH OUT OF HARDNESS TOLERANCE

| DATE | MODIFICATION | APPROVED |
|---|---|---|
| | | |
| | | |

* PLEASE IGNORE CHINESE CHARACTERS WHICH ARE FOR OUR REFERENCE ONLY.